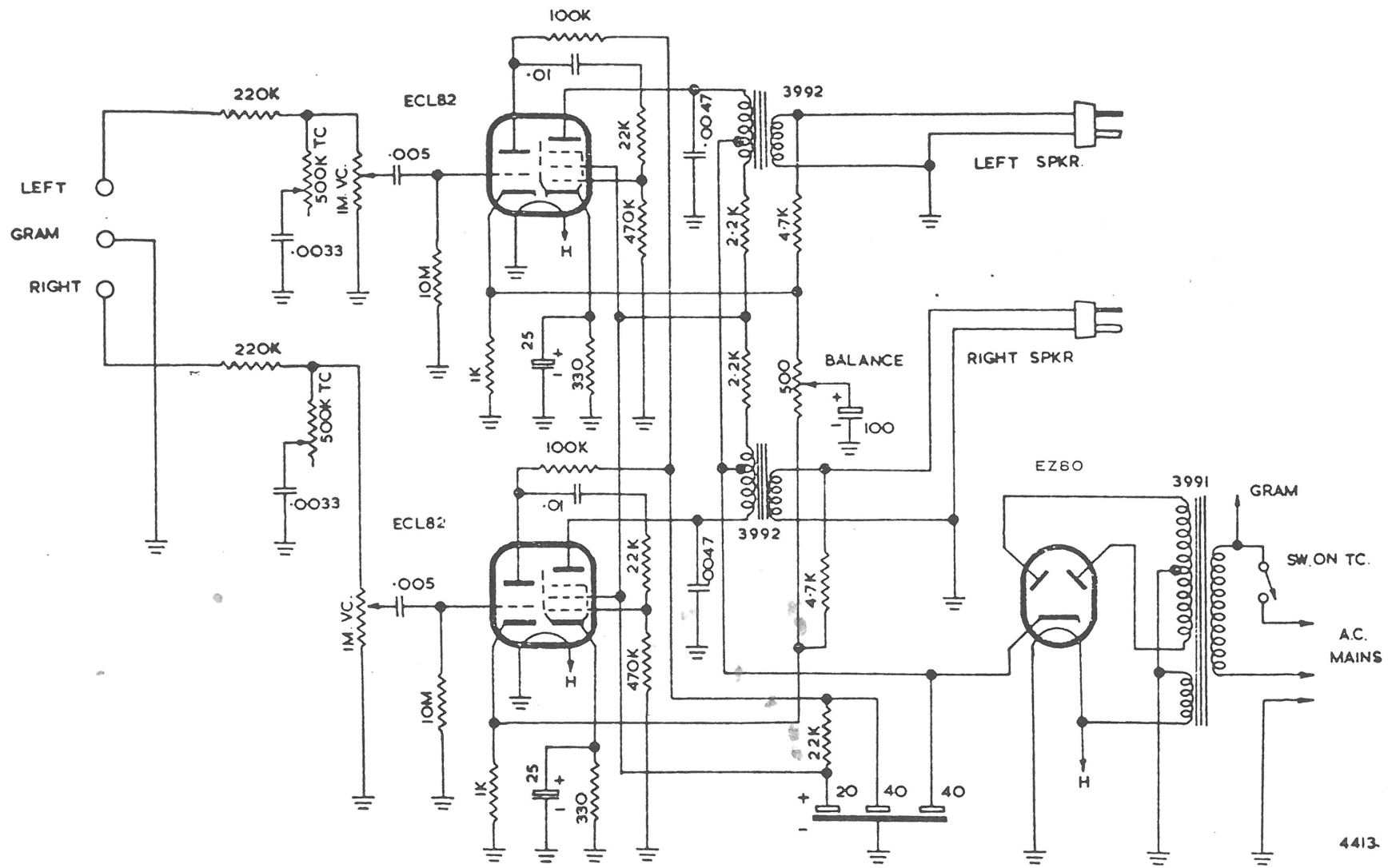

CLIPPER PORTABLE STEREOPHONIC PLAYER

4531