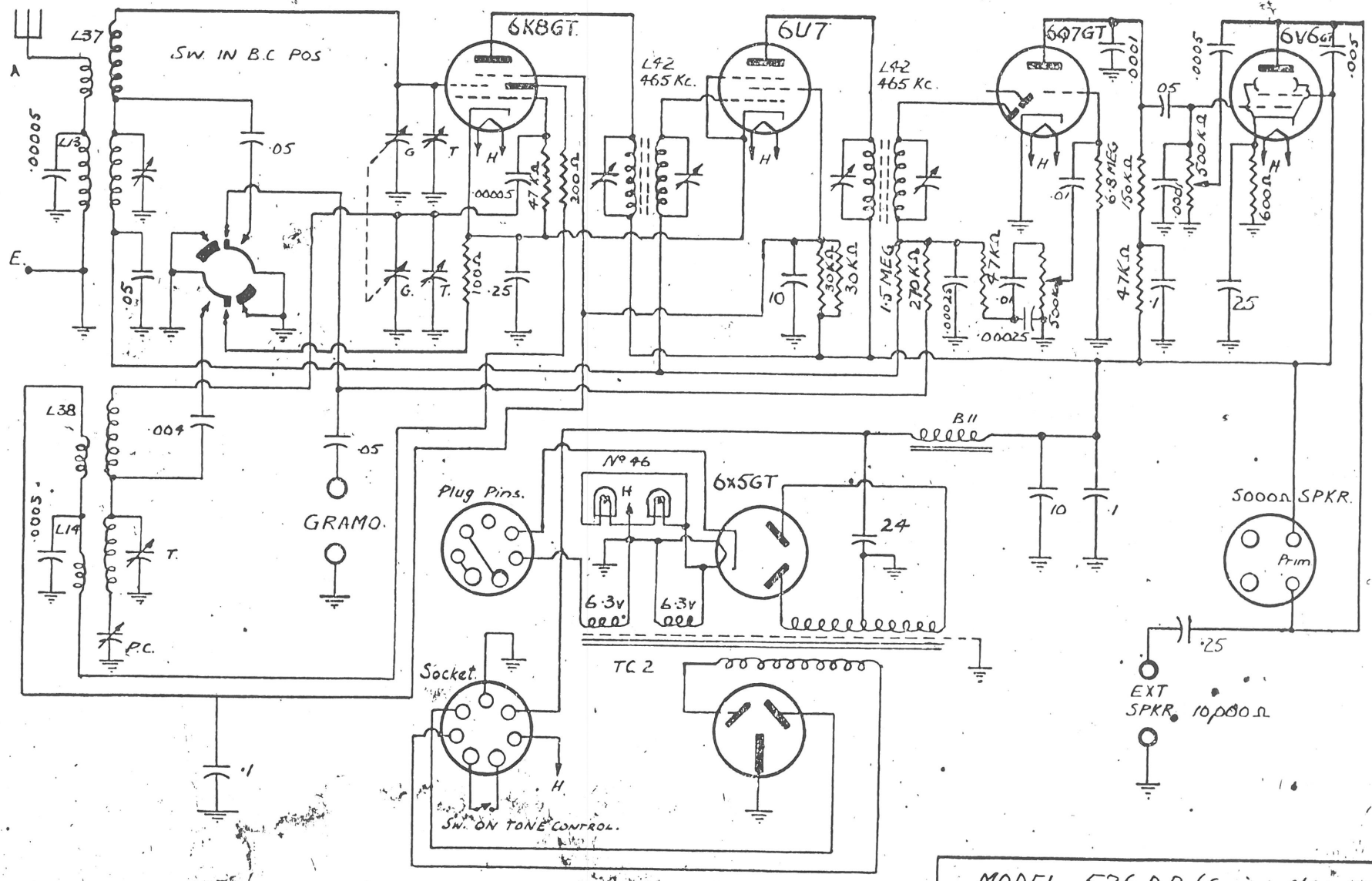

NOTE: Capacities are shown in mfd.

MODEL 526 D.P (Serial 4681-4750)			
DRAWN	E.W.G.	5.12.47	DRG. NO. 171.
TRACED	P.C.R.	8.12.47	AKRAD RADIO CORP. LTD WAIHI.
CHECKED	R.P.S.	27.1.48	