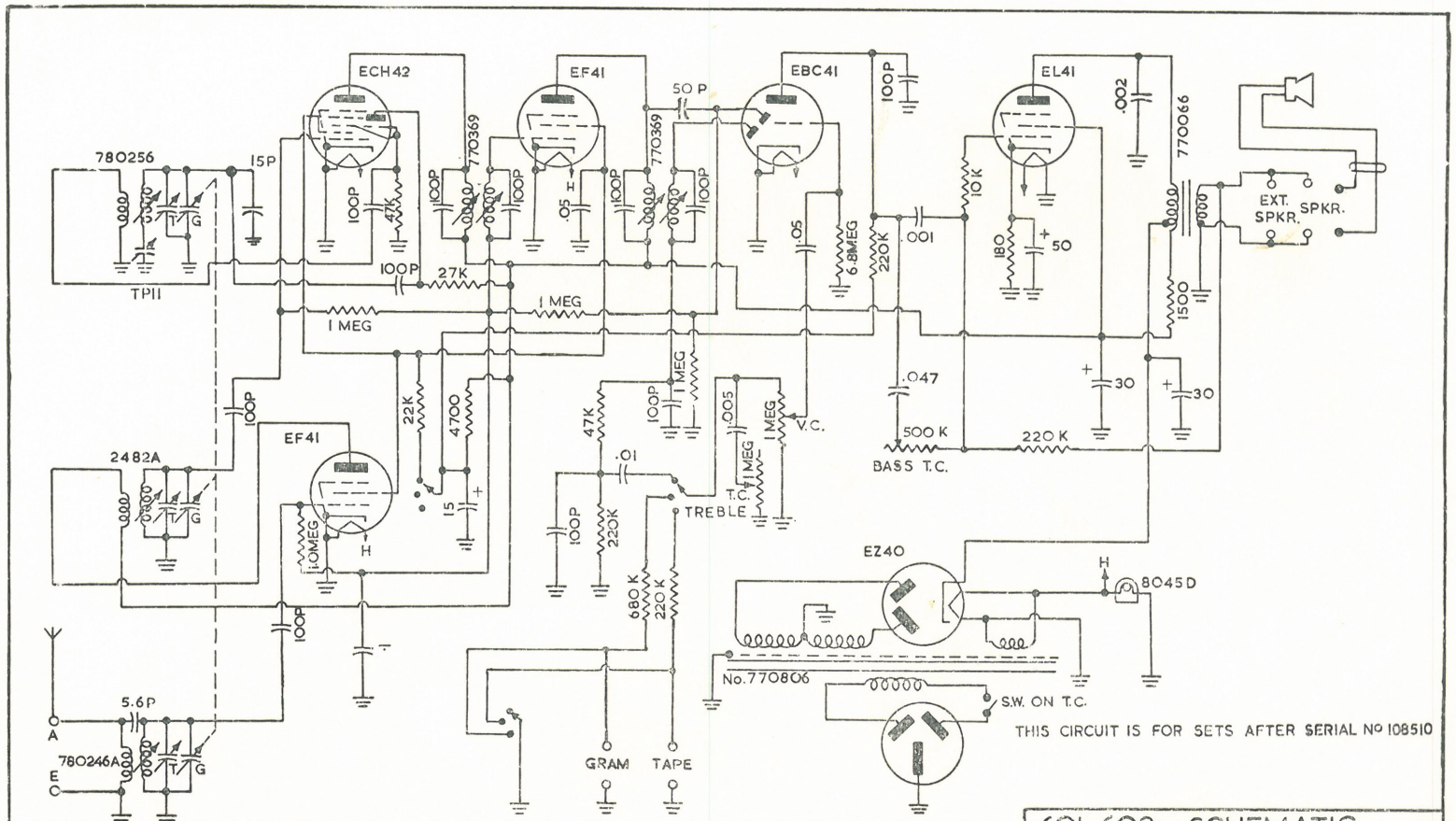


THIS CIRCUIT IS FOR SETS AFTER SERIAL No 108510

RESISTANCES SHOWN IN OHMS
SILVER MICA CAPACITIES SHOWN IN PICOFARADS AND DENOTED BY 'P'
OTHER CAPACITIES SHOWN IN MICROFARADS
RADIO-GRAM SWITCH SHOWN IN RADIO POSITION

| 601-602 SCHEMATIC. | | | |
|---|---|---|---|
| DRAWN | 3·3·58 | AWB | DRG No. 3588. |
| TRACED | 5·3·58 | AHB. | AKRAD RADIO CORP. LTD |
| CHECKED | 10·4·58 | JC | WAIHI. NEW ZEALAND. |