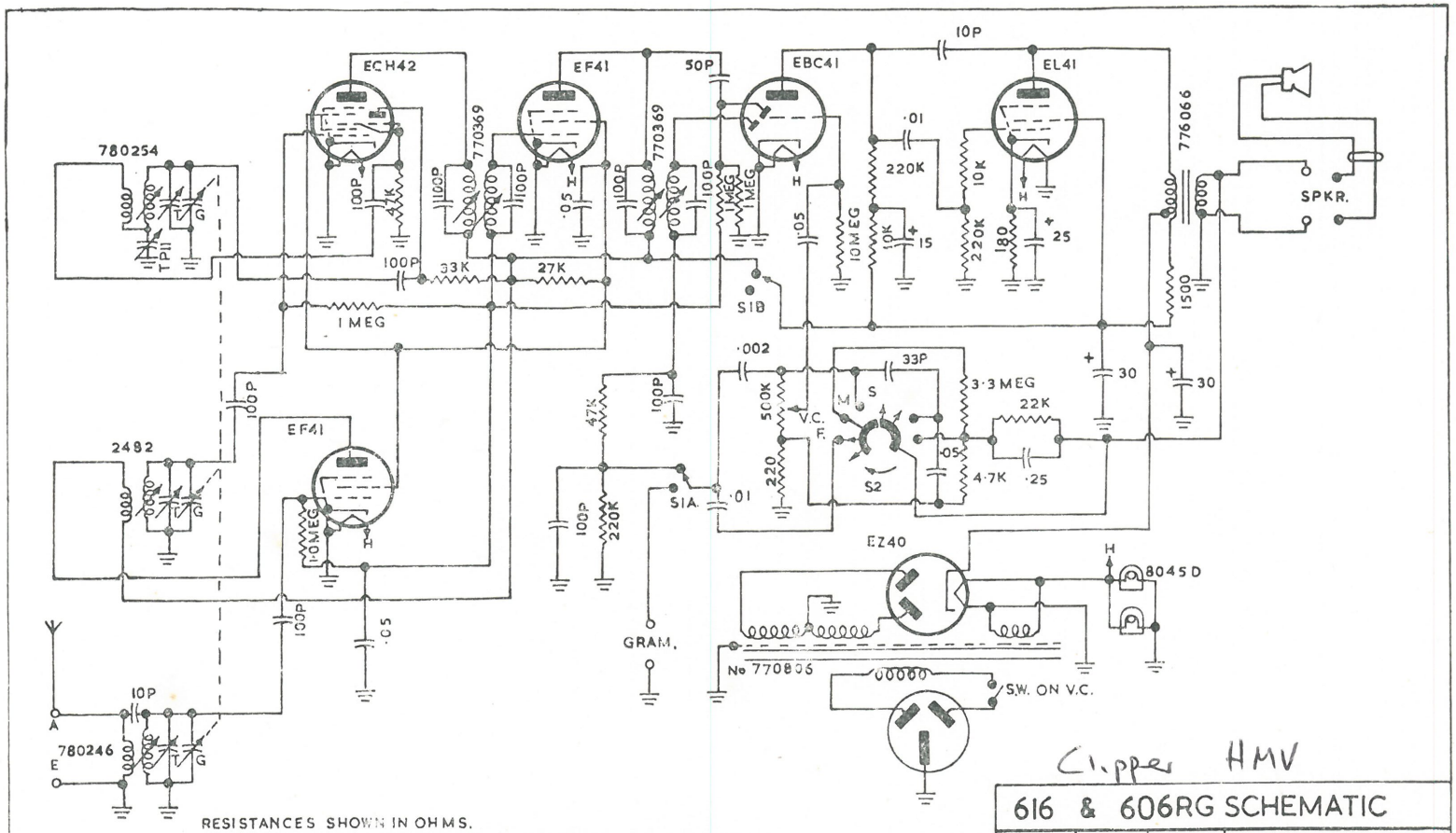

Clipper HMV

616 & 606RG SCHEMATIC

DRAWN	K.A.T.	21:5:57	DRG. No. 3172.
TRACED	A.H.	23:5:57	AKRAD RADIO CORP. LTD.
CHECKED	JTC	29:5:57	WAIHI. NEW ZEALAND.

RESISTANCES SHOWN IN OHMS.
SILVER MICA CAPACITIES SHOWN IN PICOFARADS AND DENOTED BY 'P'
OTHER CAPACITIES SHOWN IN MICROFARADS

RADIO-GRAM SWITCH SHOWN IN RADIO POSITION
TONE SWITCH SHOWN IN FIDELITY POSISTION