ASTOR

MODEL CBY

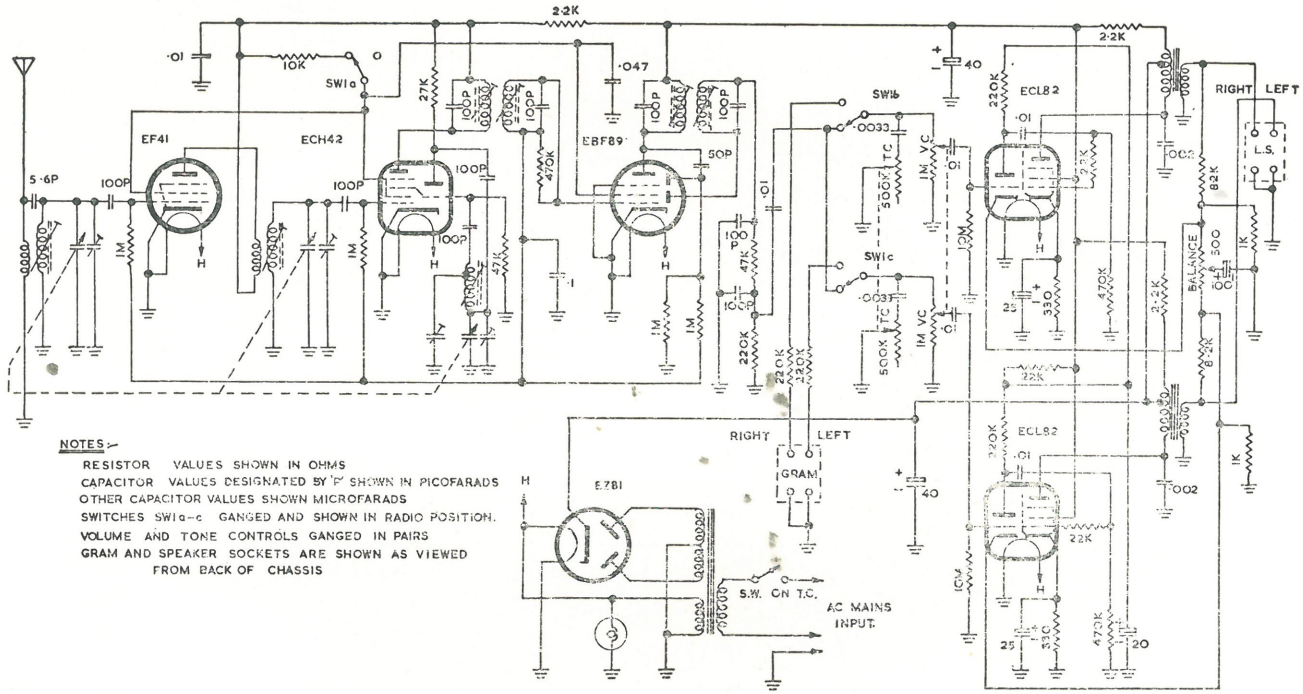

NOTES:-

RESISTOR VALUES SHOWN IN OHMS
CAPACITOR VALUES DESIGNATED BY 'P' SHOWN IN PICOFARADS
OTHER CAPACITOR VALUES SHOWN MICROFARADS
SWITCHES SW1a–c GANGED AND SHOWN IN RADIO POSITION.
VOLUME AND TONE CONTROLS GANGED IN PAIRS
GRAM AND SPEAKER SOCKETS ARE SHOWN AS VIEWED FROM BACK OF CHASSIS

CBY