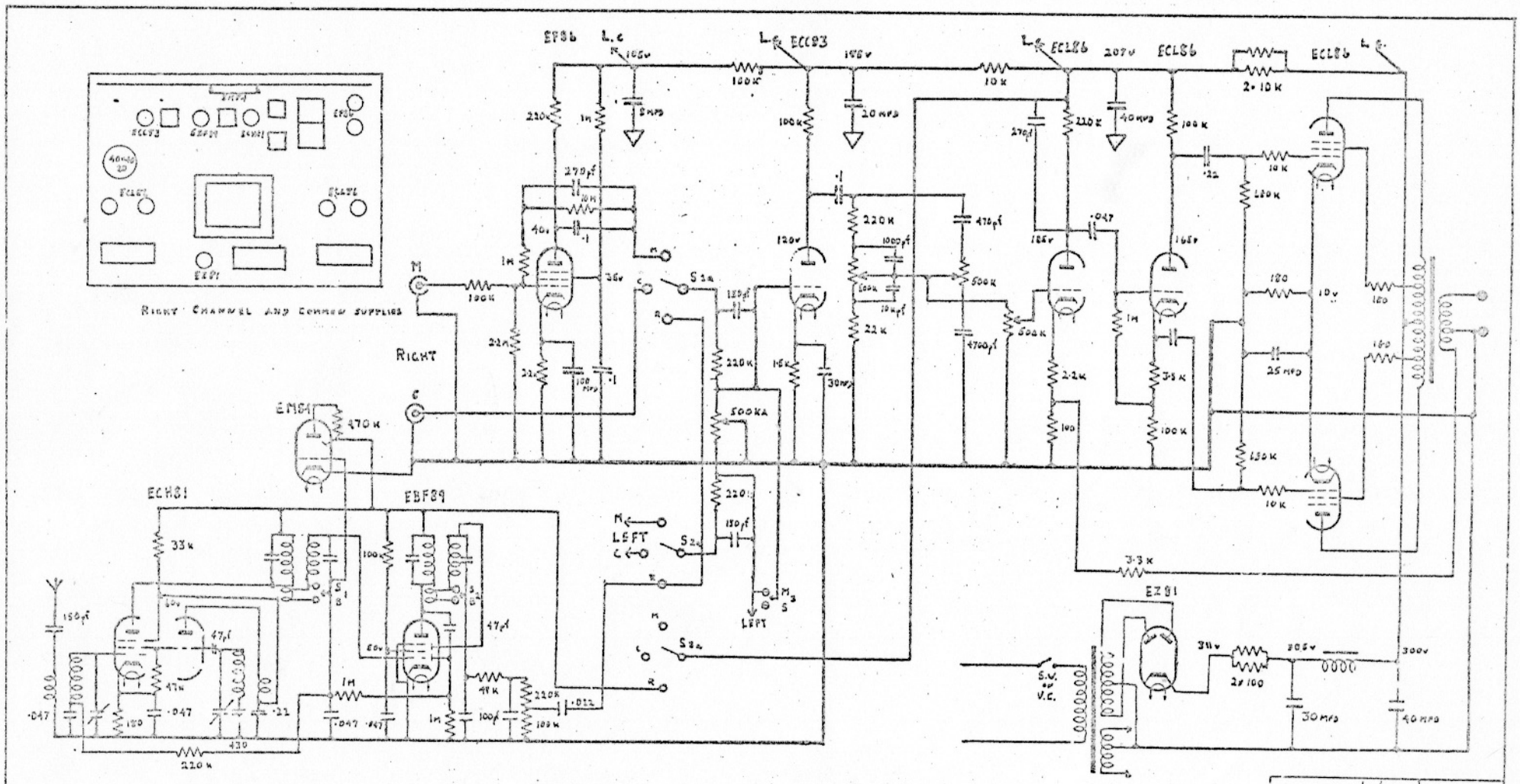

— TUNER AMPLIFIER TAI. —

DWN. 3/8/64
FOUNTAIN MFG Co LTD.
AUCKLAND N.Z.

017

FOUNTAIN