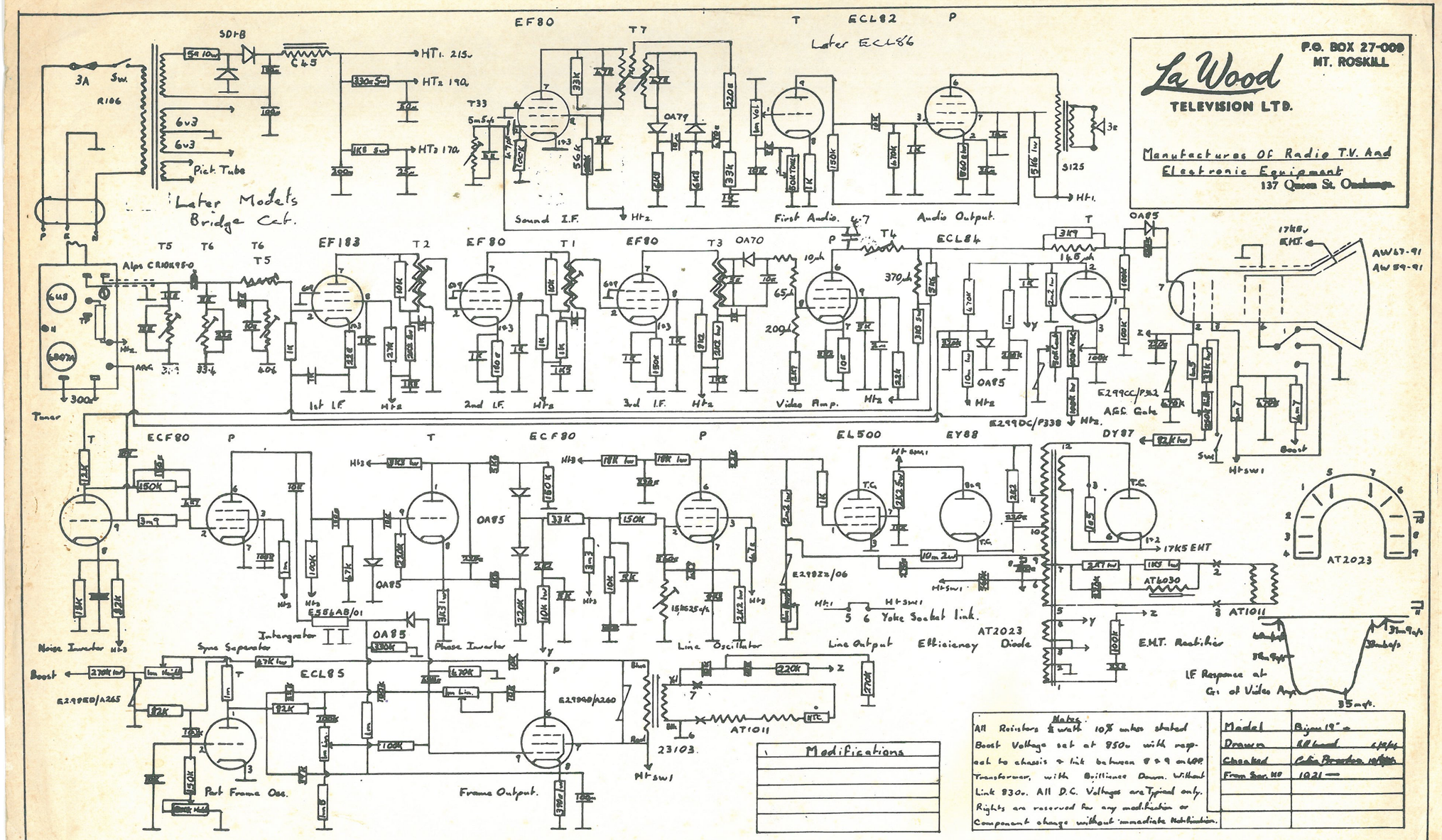
La Wood
TELEVISION LTD.
P.O. BOX 27-009
MT. ROSKILL
Manufactures Of Radio T.V. And Electronic Equipment
137 Queen St. Onehunga
Later Models Bridge Cct.
Later ECL86
Sound I.F.
First Audio.
Audio Output.
1st I.F.
2nd I.F.
3rd I.F.
Video Amp.
AGC Gate
Tuner
Noise Inverter
Sync Separator
Interrogator
Phase Inverter
Line Oscillator
Line Output
Efficiency Diode
E.H.T. Rectifier
Part Frame Osc.
Frame Output.
Yoke Socket link.
IF Response at G1 of Video Amp
AW67-91
AW59-91
Modifications
All Resistors ½ watt 10% unless stated
Boost Voltage set at 850v with respect to chassis & tie between 8 & 9 on 609 Transformer, with Brilliance Down. Without Link 930v. All D.C. Voltages are Typical only.
Rights are reserved for any modification or Component change without immediate Notification.
Model
Drawn
Checked
From Ser. No
1021 —