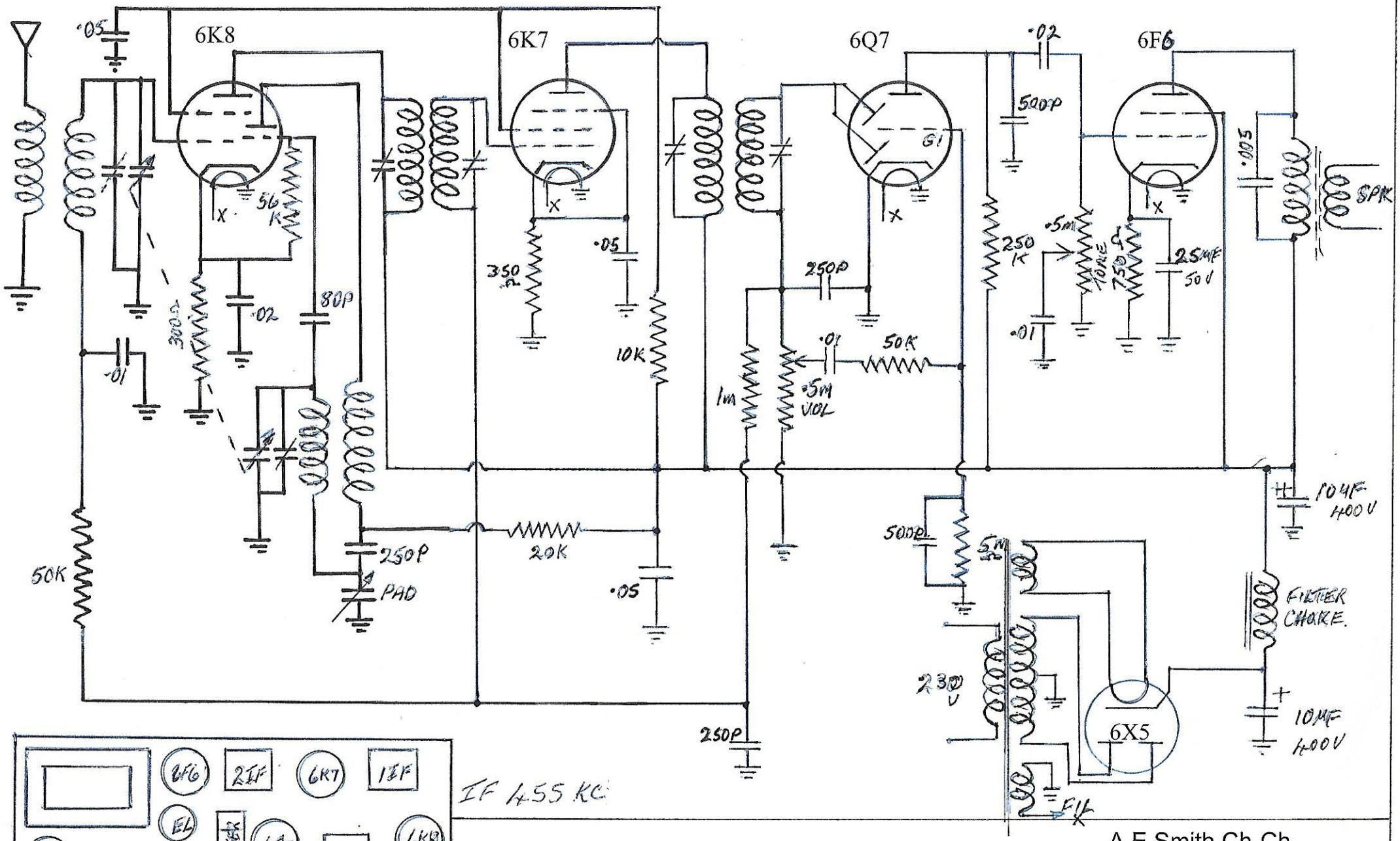

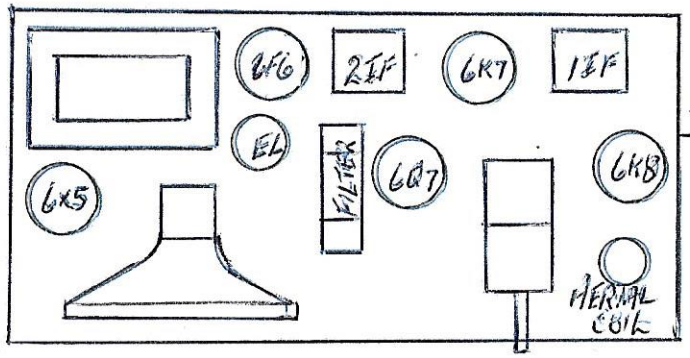

IF 455 KC

A E Smith Ch-Ch
1-8-2013

NATIONAL Model B44

NZ made 1945 [as per MGAR p 140]