TELEGRAMS:
"RADICENTRE"

TELEPHONE 55-020

R.N.Z
RADIO CORPORATION OF NEW ZEALAND LTD

80 COURTENAY PLACE - - WELLINGTON, C3
G.P.O. BOX 1585

SERVICE SUPPLEMENT

(Reprinted July 1948/200)

"COURTENAY" → **MODEL 103 & 5c** IMPROVED

"PACIFIC" 6-valve

6-valve model, using 56 separate oscillator

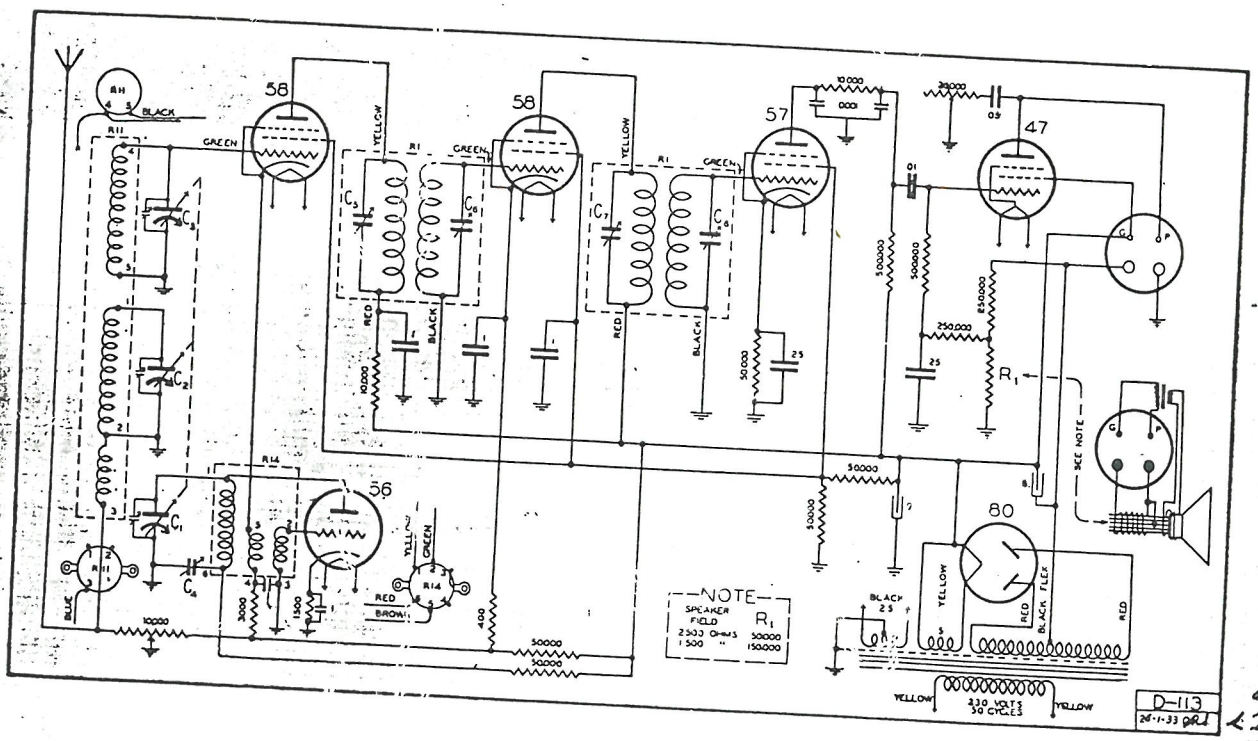

date 25-1-33

~~Also Dwg D-128 dated 2-5-33 schematic with stamp "Hope Gibbons C.O." with 5165-7~~

Note Dwg No D-110 marked "5C & 103" shows a 5-valve model using a 57 autodyne mixer

D-110
2-12-32

4