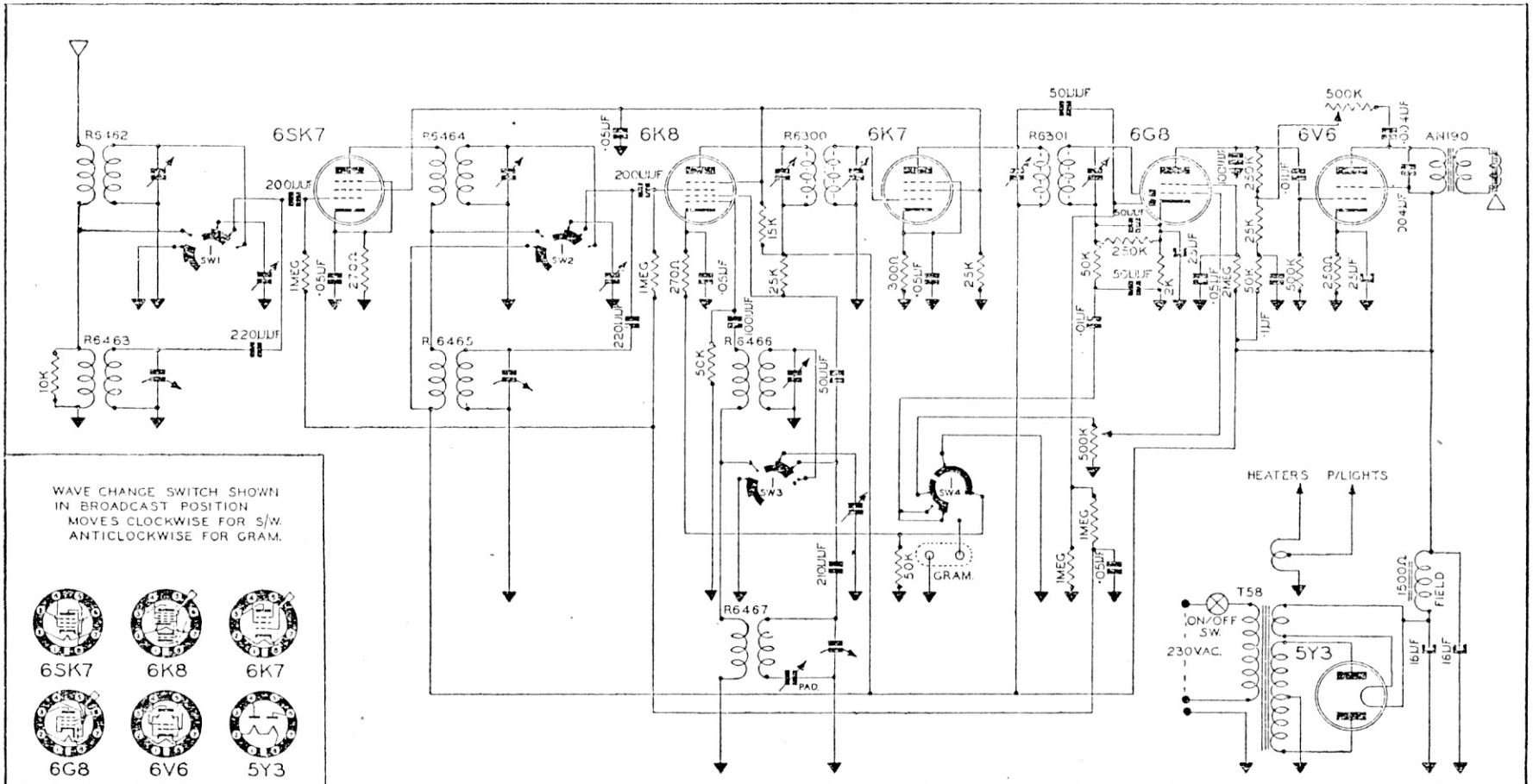

DESIGN	LAB	DATE	MODEL
DRAWN		28·5·51	166R.
CHECKED		31·5·51	D.No. 374
APPROVED		31 5 51	

6 VALVE DUAL WAVE RECEIVER

MANUFACTURED BY RADIO CORPORATION OF NEW ZEALAND LIMITED

AMENDMENTS	DATE	CHKD.
Centenary.		