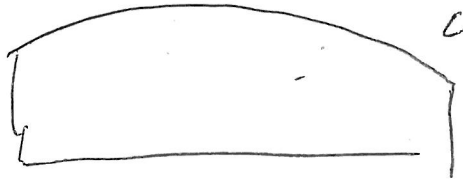

curved top dial

34 similar but no RF stage + 3 band + 9"x6" EM spkr

model 61 similar

# model 44 (P.M. speaker)

6J7 ex S/N 82722 82625

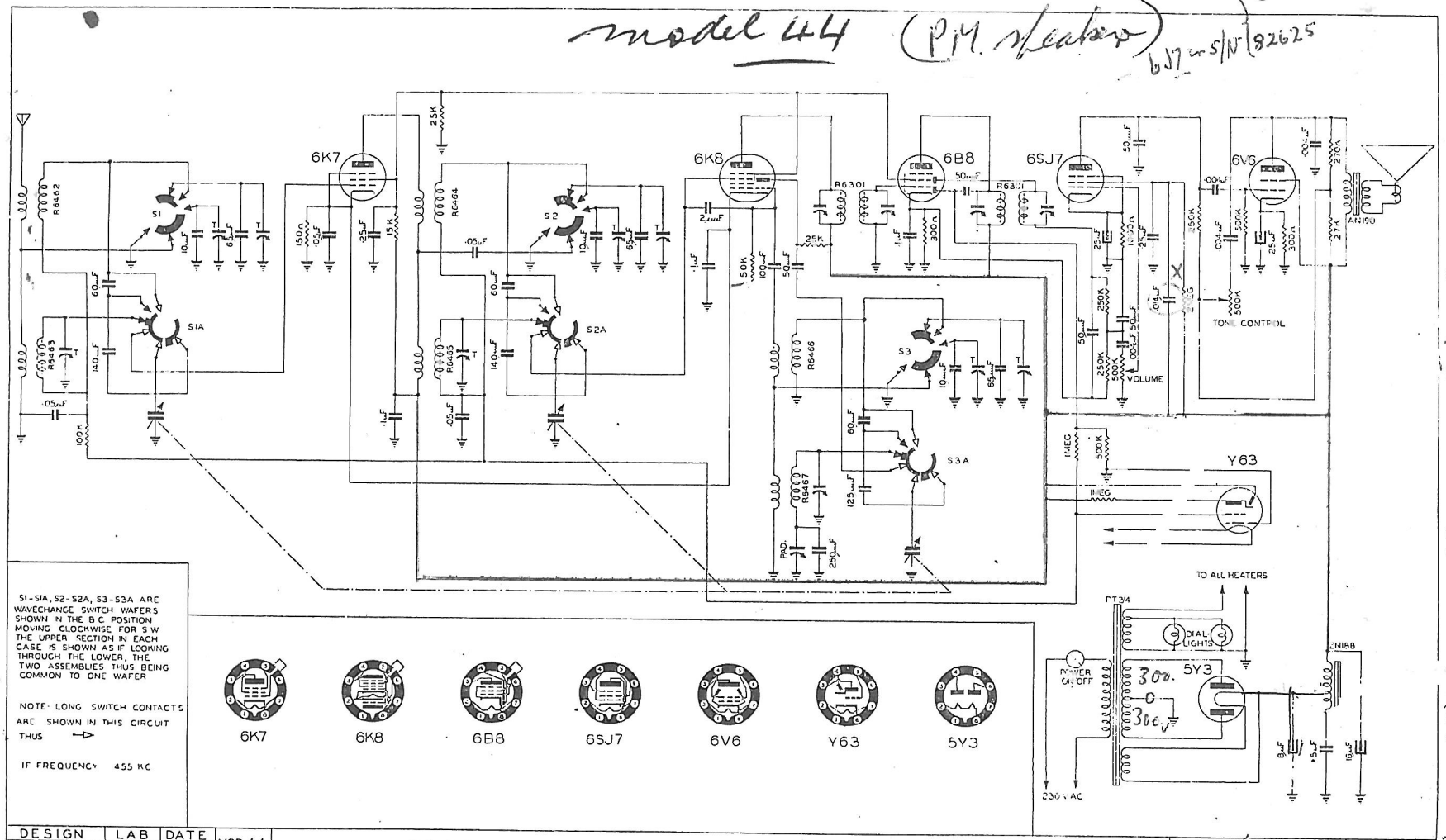


S1-S1A, S2-S2A, S3-S3A ARE WAVECHANGE SWITCH WAFERS SHOWN IN THE B.C. POSITION MOVING CLOCKWISE FOR S.W. THE UPPER SECTION IN EACH CASE IS SHOWN AS IF LOOKING THROUGH THE LOWER, THE TWO ASSEMBLIES THUS BEING COMMON TO ONE WAFER

NOTE: LONG SWITCH CONTACTS ARE SHOWN IN THIS CIRCUIT THUS →

IF FREQUENCY 455 KC

6K7 6K8 6B8 6SJ7 6V6 Y63 5Y3

| DESIGN | LAB | DATE | MOD 44 |
|---|---|---|---|
| DRAWN | | 14-7-48 | |
| CHECKED | | 28-7-48 | D No 368 |
| APPROVED | | 28-7-48 | |

7 VALVE RECEIVER: BROADCAST AND TWO SHORTWAVE SPREADBANDS

Manufactured by the Radio Corporation of New Zealand, Wgtn.

| AMENDMENTS | DATE | CHKD |
|---|---|---|
| | | |

IMPORTANT (MOD) .014µf marked "X"

also model 61

Note resonant filter

3-19

44 mod:- add 470Ω w/v