R.N.Z

RADIO CORPORATION OF NEW ZEALAND LTD.

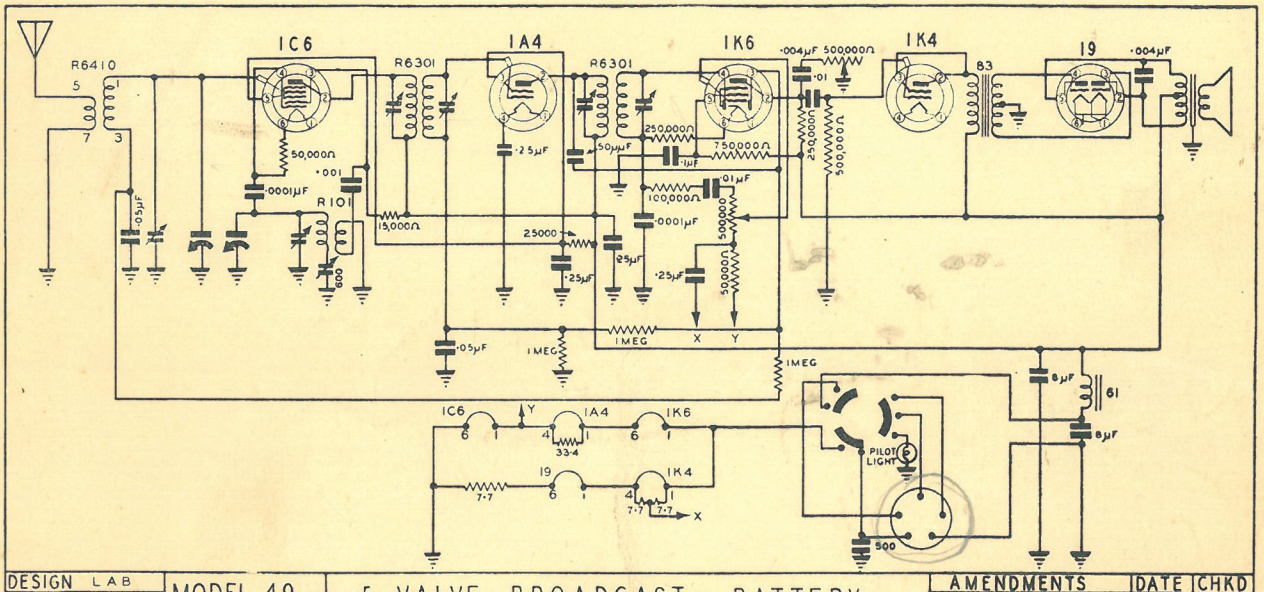

DESIGN LAB	MODEL 49	5 VALVE BROADCAST BATTERY RECEIVER	AMENDMENTS	DATE	CHKD
DRAWN					
CHECKED	D. 316				
DATE 26 6 39		RADIO CORPORATION OF NEW ZEALAND LIMITED			

Model 40 also - only change is dial

2-26

2.
36