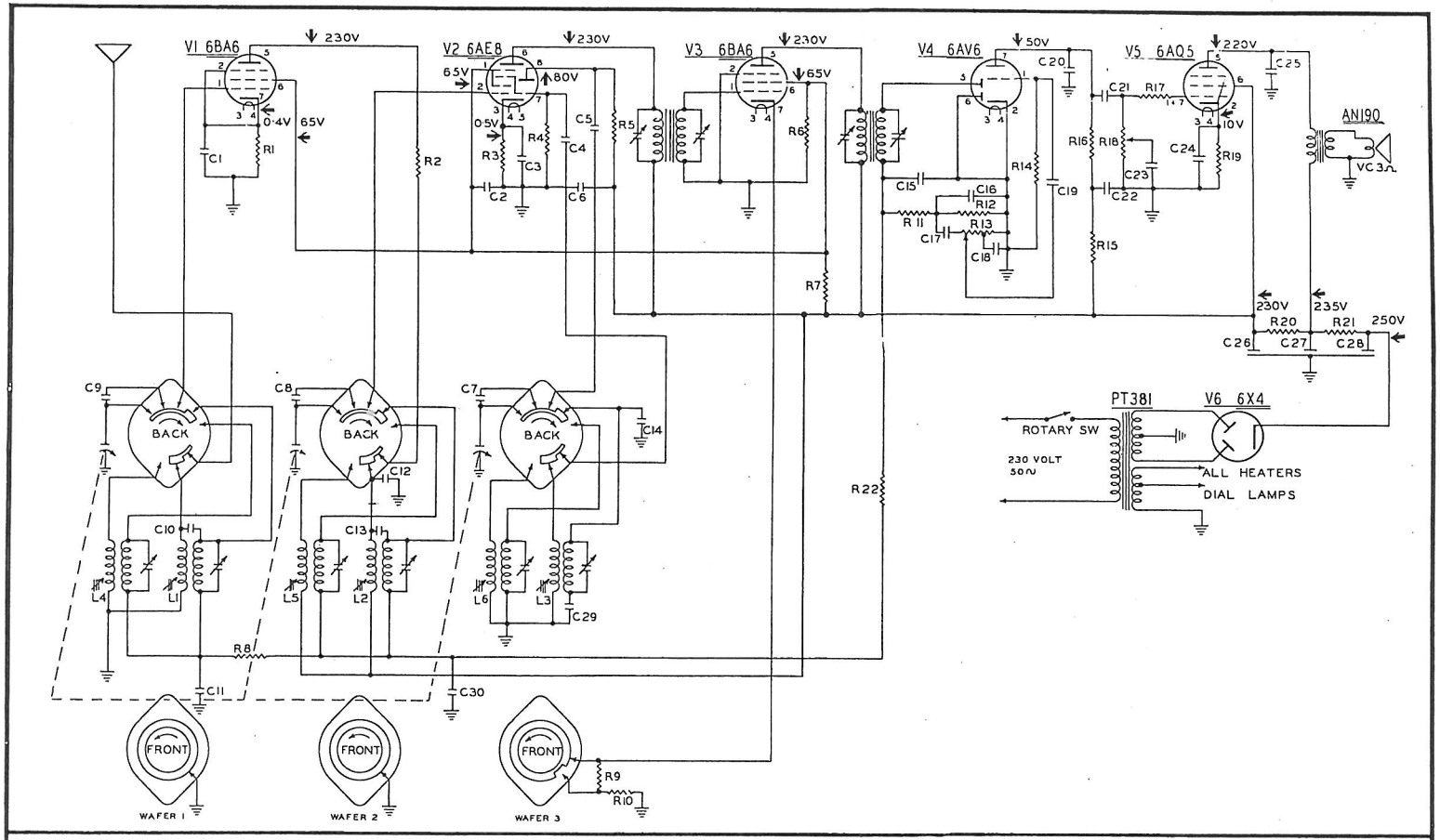


| | | | | | | | |
|---|---|---|---|---|---|---|---|
| R1 | 66Ω | C1 | ·05MF | L1 | BC | ANT | 01/11 |
| R2 | 33Ω | C2 | ·05MF | L2 | BC | RF | 2/21 |
| R3 | 68Ω | C3 | ·05MF | L3 | BC | OSC | 18/31 |
| R4 | 33K | C4 | 100PF | L4 | SW | ANT | 19/12 |
| R5 | 33K | C5 | 50PF | L5 | SW | RF | 20/22 |
| R6 | 500K | C6 | ·25MF | L6 | SW | OSC | 21/32 |
| R7 | 33K | C7 | 110PF | | | | |
| R8 | 470K | C8 | 120PF | | | | |
| R9 | 330Ω | C9 | 120PF | | | | |
| R10 | 270Ω | C10 | 1" TWIN BELL WIRE 11PF | | | | |
| + R11 | 47K | C11 | ·05MF | | | | |
| R12 | 500K | C12 | 25PF | | | | |
| R13 | 500K | C13 | 1" TWIN BELL WIRE 11PF | | | | |
| R14 | 10M | C14 | 15PF | | | | |
| R15 | 47K | + C15 | 100PF | | | | |
| R16 | 270K | + C16 | 100PF | | | | |
| R17 | 47K | C17 | ·01MF | | | | |
| R18 | 500K | C18 | ·002MF | | | | |
| R19 | 270Ω | C19 | ·01MF | | | | |
| R20 | 220Ω 3W | C20 | 180PF | | | | |
| R21 | 220Ω 3W | C21 | ·01MF | | | | |
| R22 | 2M | C22 | ·25MF | | | | |
| | | C23 | ·01MF | | | | |
| | | C24 | 16MF | | | | |
| | | C25 | ·004MF | | | | |
| | | C26 | 40MF | | | | |
| | | C27 | 40MF | | | | |
| | | C28 | 20MF | | | | |
| | | C29 | 440PF | | | | |
| | | C30 | ·05MF | | | | |

+ ONE UNIT

DIAL SCALE OE 248
A.W.A. GANG 18635
SPEAKER R.N.Z. 8" PM
I.F. TRANSFORMERS 12101 RCNZ
I.F.— 455KC/SEC

BAND SWITCH SHOWN IN BROADCAST POSITION

RECEIVER SENSITIVITY

| FREQUENCY | GENERATOR CONNECTION | INPUT VOLTAGE FOR SIGNAL OUTPUT OF 50 m w | INPUT VOLTAGE FOR SIGNAL TO NOISE RATIO OF 10 d b |
|---|---|---|---|
| 455 Kc/Sec | To I.F. tube grid through :05u F | 5500 μV | |
| 455 Kc/Sec | To converter grid through :05u F | 45 μV | |
| 600 Kc/Sec | To aerial lead through dummy antenna | 1 μV | 10 μV |
| 1000 Kc/Sec | To aerial lead through dummy antenna | 1 μV | 10 μV |
| 1400 Kc/Sec | To aerial lead through dummy antenna | 1 μV | 10 μV |
| 10 Mc/Sec | To aerial lead through dummy antenna | 7 μV | 7 μV |
| 15 Mc/Sec | | 28 μV | 20 μV |

All voltages indicated are positive to chassis and values are as measured with a 1000 Ω / volt meter with mains voltage at 230 volts, dial pointer at 600 K.C. and aerial lead connected to chassis.

All radio frequencies modulated 30% at 400 c/s. Tone control turned to high frequency limit. Volume control full on.

| SIGN | LAB | DATE | MODEL 602 |
|---|---|---|---|
| DRAWN | | 17-9-57 | |
| CHECKED | | 16-10-57 | D No 394 |

# 6 VALE DUAL WAVE RECEIVER

MANUFACTURED BY RADIO CORPORATION OF NEW ZEALAND LIMITED

| AMENDMENTS | CHKD | DATE |
|---|---|---|
| | | |

3/66

602