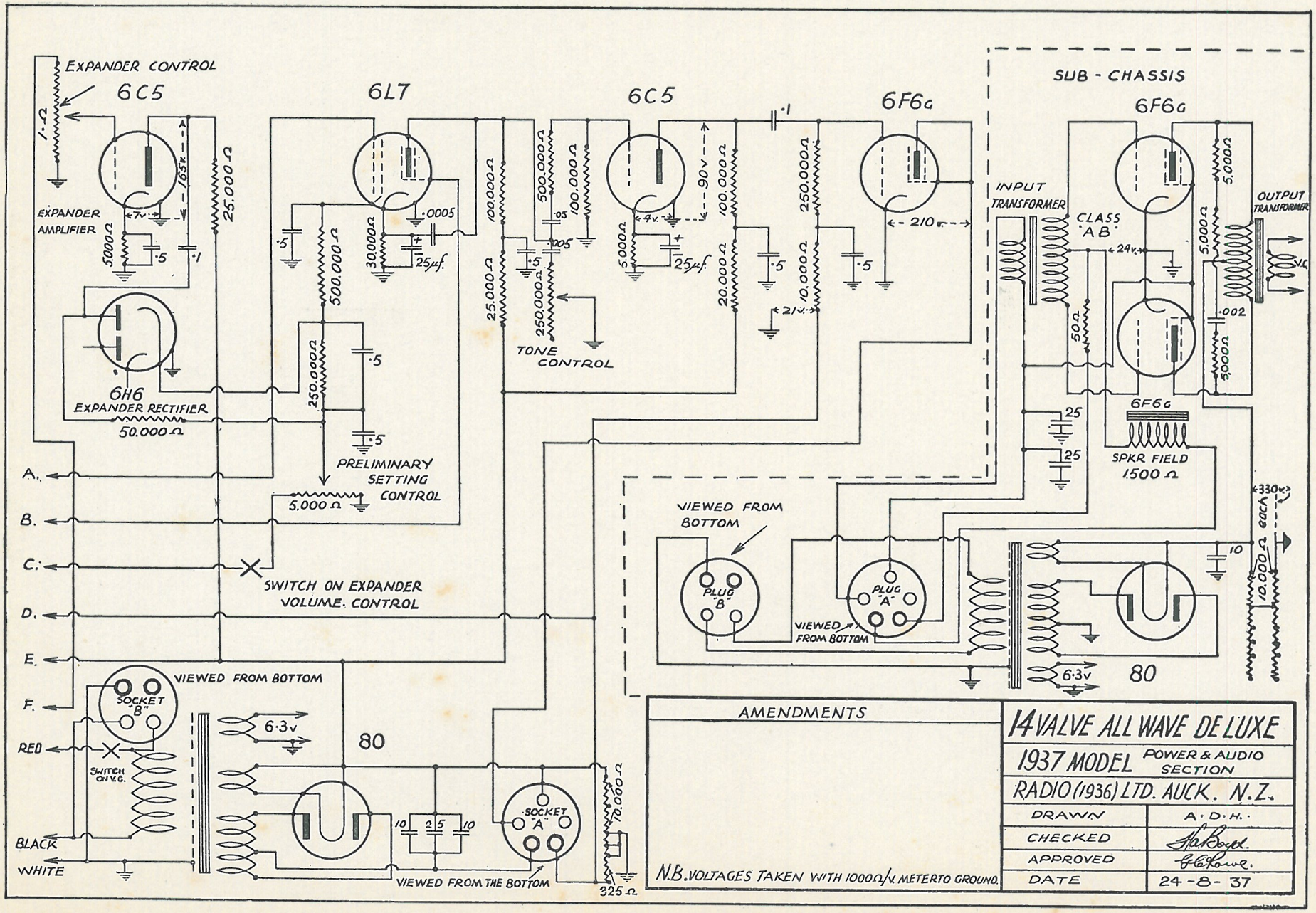

AMENDMENTS	14 VALVE ALL WAVE DE LUXE	
	1937 MODEL	POWER & AUDIO SECTION
	RADIO (1936) LTD. AUCK. N.Z.	
	DRAWN	A·D·H.
	CHECKED	H. A. Boyd.
	APPROVED	G. G. Rowe.
N.B. VOLTAGES TAKEN WITH 1000Ω/V METER TO GROUND.	DATE	24-8-37

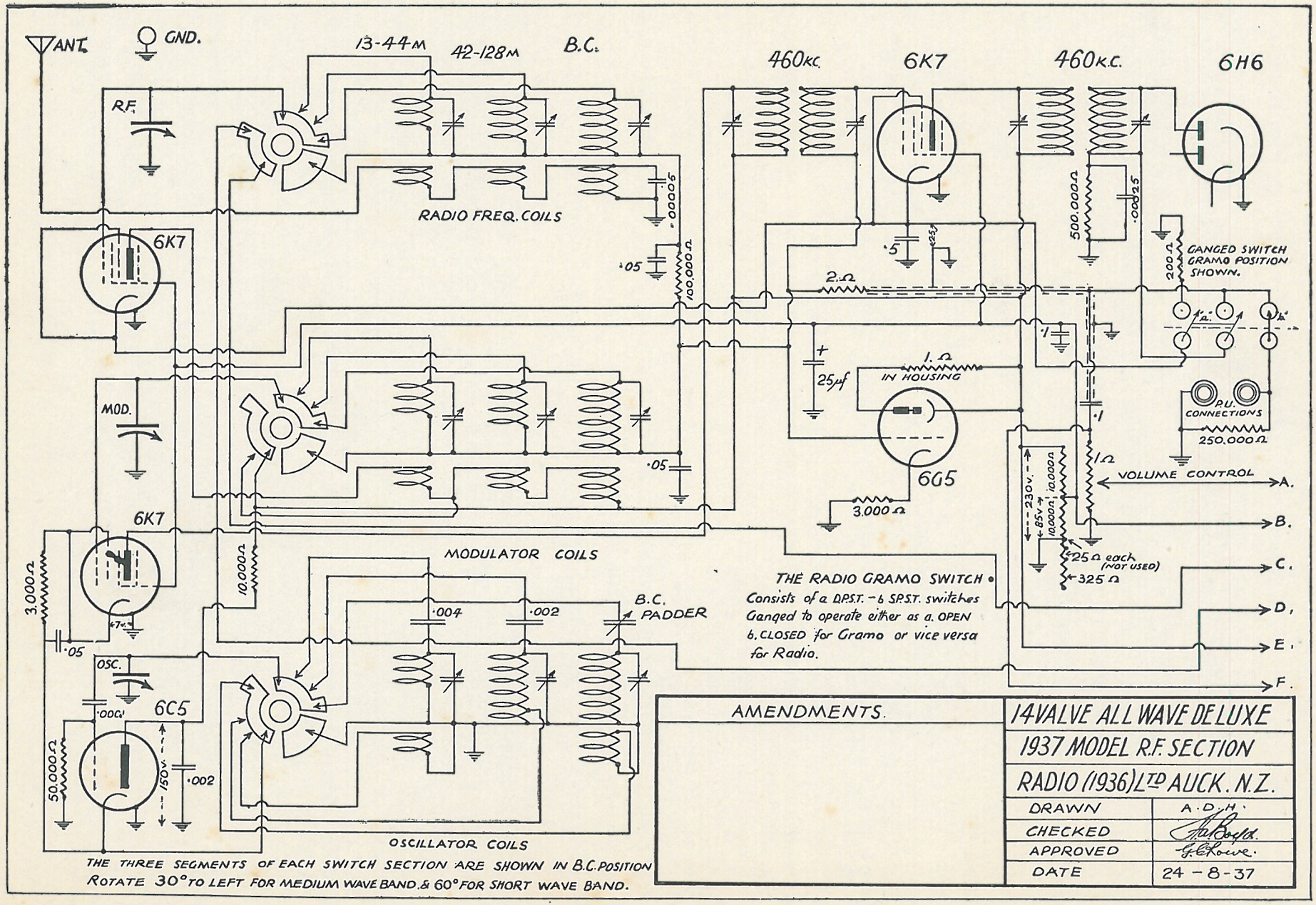

AMENDMENTS.	14 VALVE ALL WAVE DE LUXE	
	1937 MODEL R.F. SECTION	
	RADIO (1936) LTD AUCK. N.Z.	
	DRAWN	A.D.H.
	CHECKED	[illegible]
	APPROVED	G. Howe.
	DATE	24-8-37