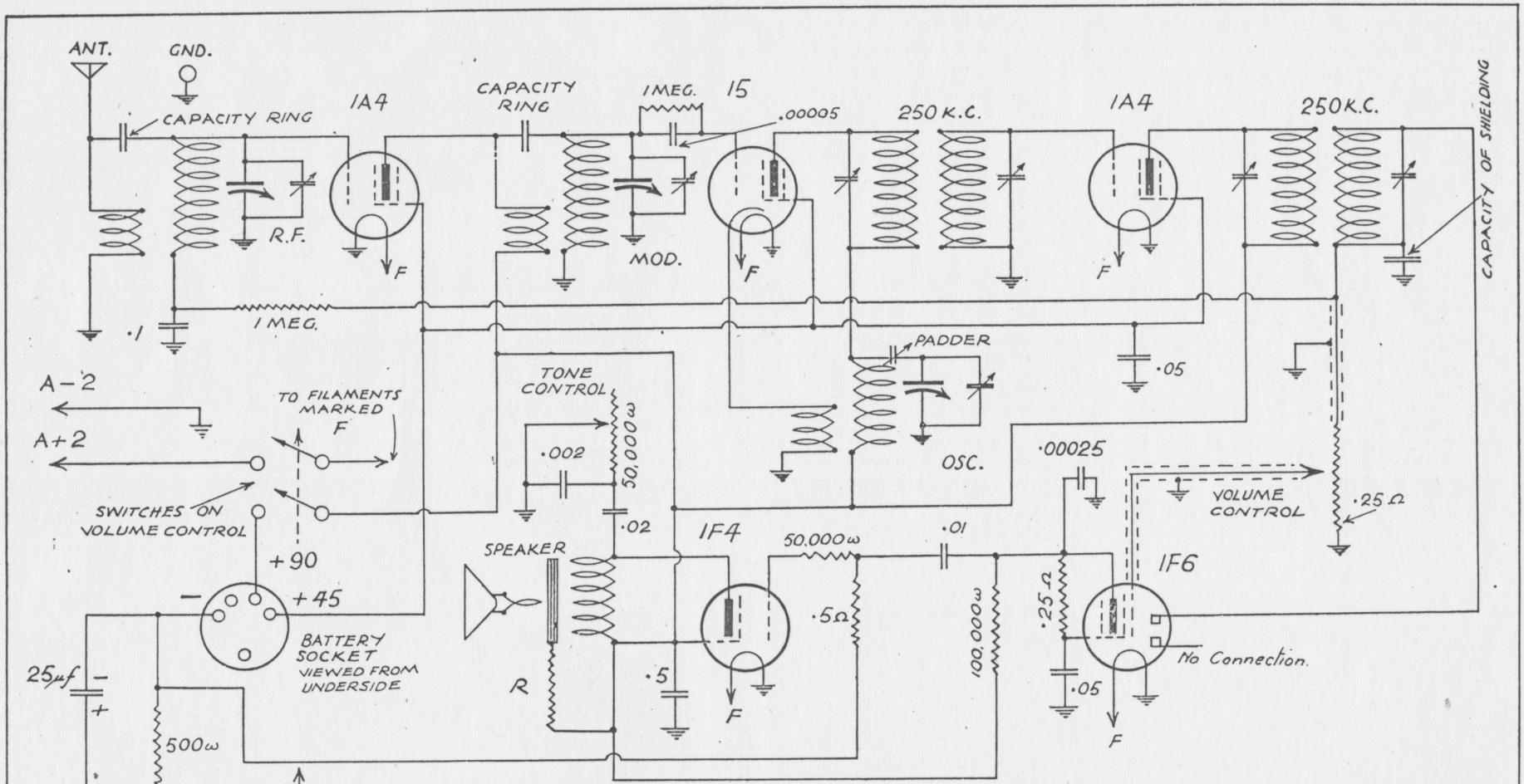

AMENDMENTS	5 VALVE B.C. BATTERY	
As from 10th June 50.000 ohm. Resistor R will be fitted to speaker.	1937 MODEL	
	RADIO (1936) LTD AUCK. N.Z.	
	DRAWN	A·D·H
	CHECKED	[illegible]
	APPROVED	[illegible]
	DATE	28 - 6 - 37