Tubes

1	6S7
2	6D6G
3	6Q7
4	6G6G

Condensers

5	·00005
6	·0001
7	·00025
8	·001
9	·005
10	·01
11	·05
12	·1
13	·5
14	8 µfd.
15	16 "
16	25 " 25v

Resistors

17	250
X	500
18	1000
19	5000
20	25000
21	50000
22	100000
23	500000
24	1 meg

General

25	Ant.
26	Gnd.
27	1ST IF 256 KC
28	2nd IF 256 KC.
29	Vol Control ½ meg
31	SPKR. PM.
32	6v DC
33	RF choke
34	" "
35	Utah VIB. Reed
36	TB5 Trimmer
37	To Filaments
38	Switch on Vol. Control

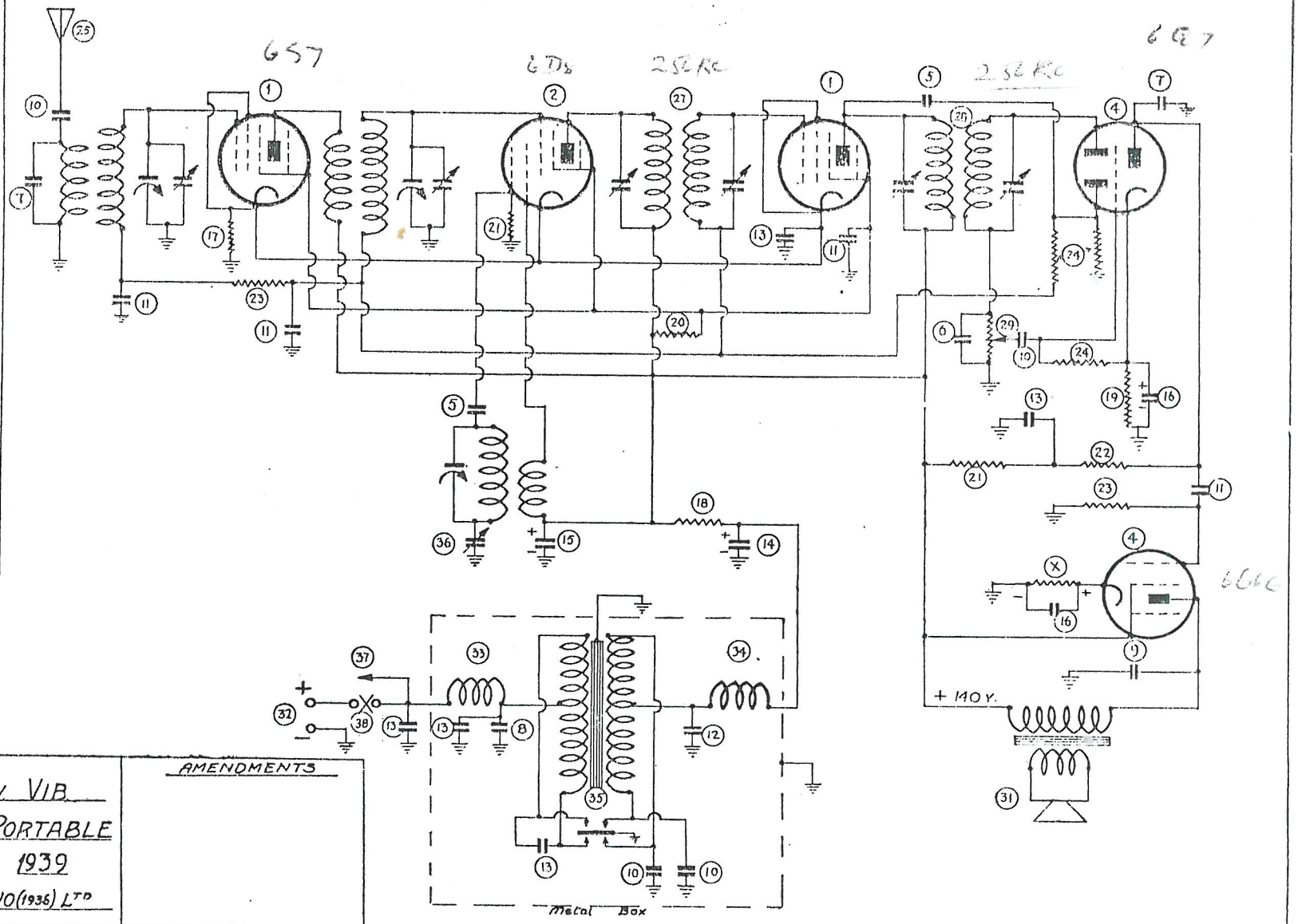

DRWN	5v VIB.	AMENDMENTS
CHKD	PORTABLE	
APPRVD	1939	
DATE 26-6-39.	RADIO (1936) LTD	