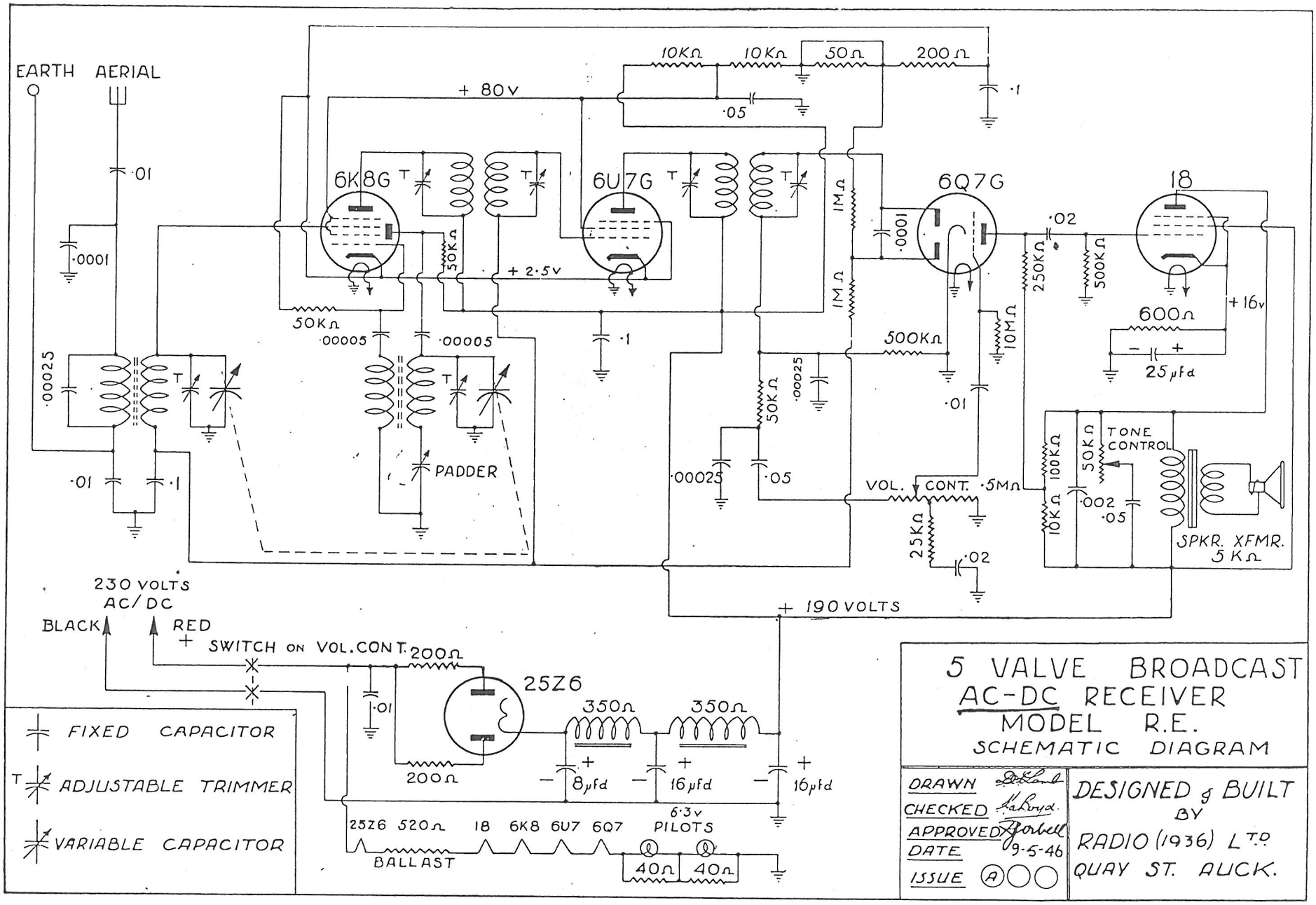

Presumably the last AC/DC model built

RE