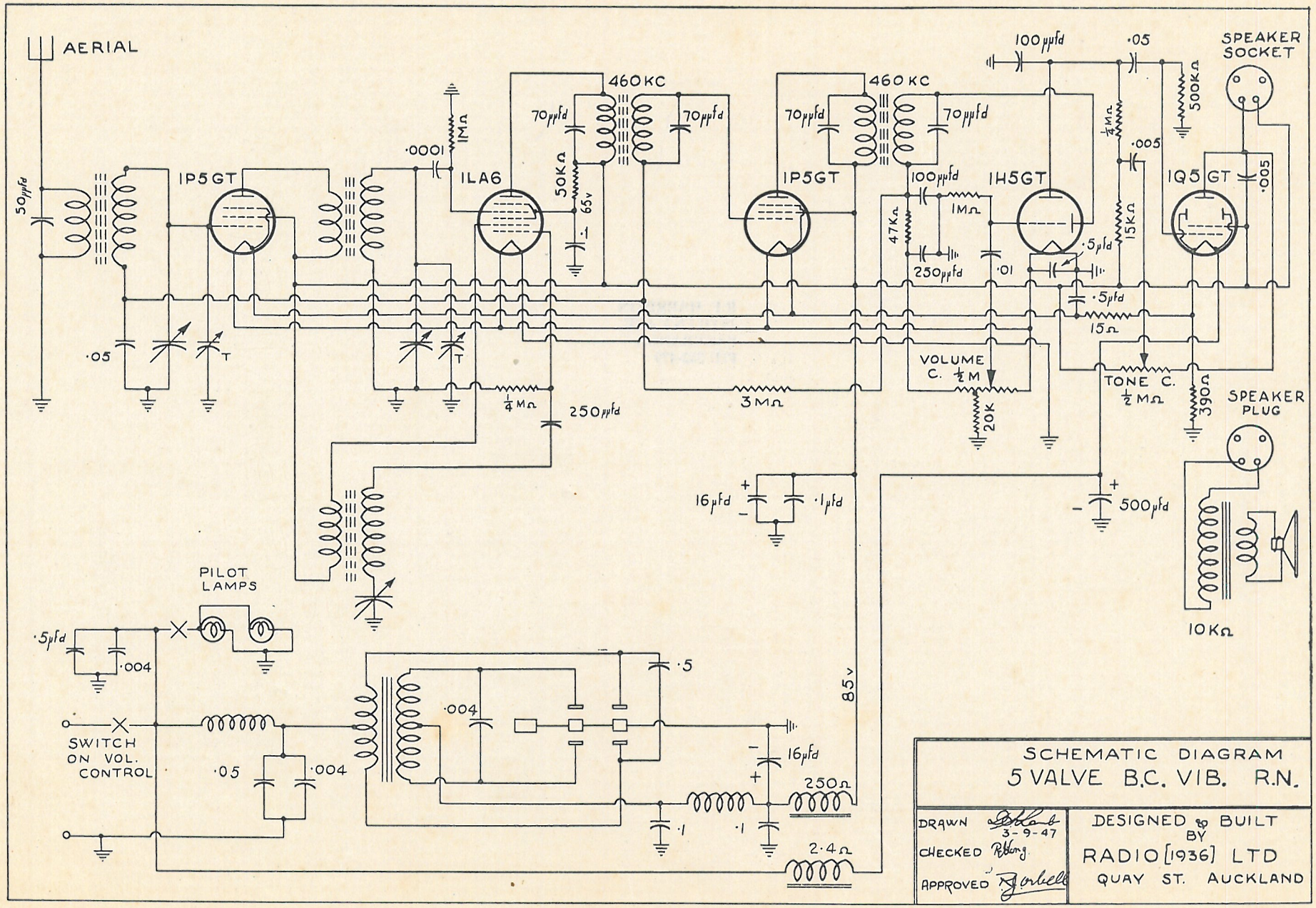

SCHEMATIC DIAGRAM
5 VALVE B.C. VIB. R.N.

DRAWN 3-9-47
CHECKED
APPROVED

DESIGNED & BUILT BY
RADIO [1936] LTD
QUAY ST. AUCKLAND

RN