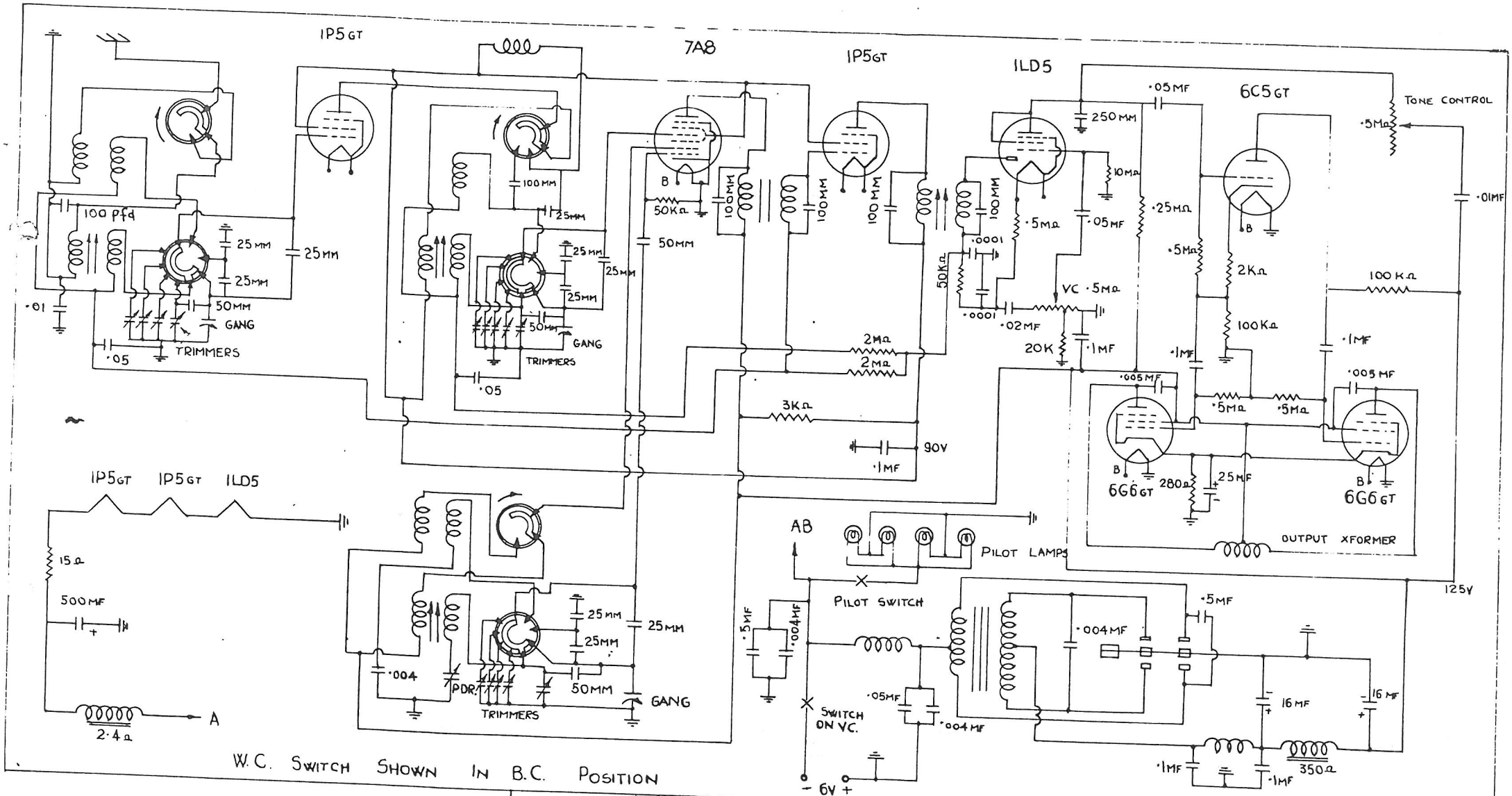

DRAWN : 4/3/50 TRACED : CHECKED : 7-3-50	RADIO (1936) LTD QUAY ST. AUCKLAND N.Z.	7V. BANDSPREAD VIBRATOR MODEL RQ