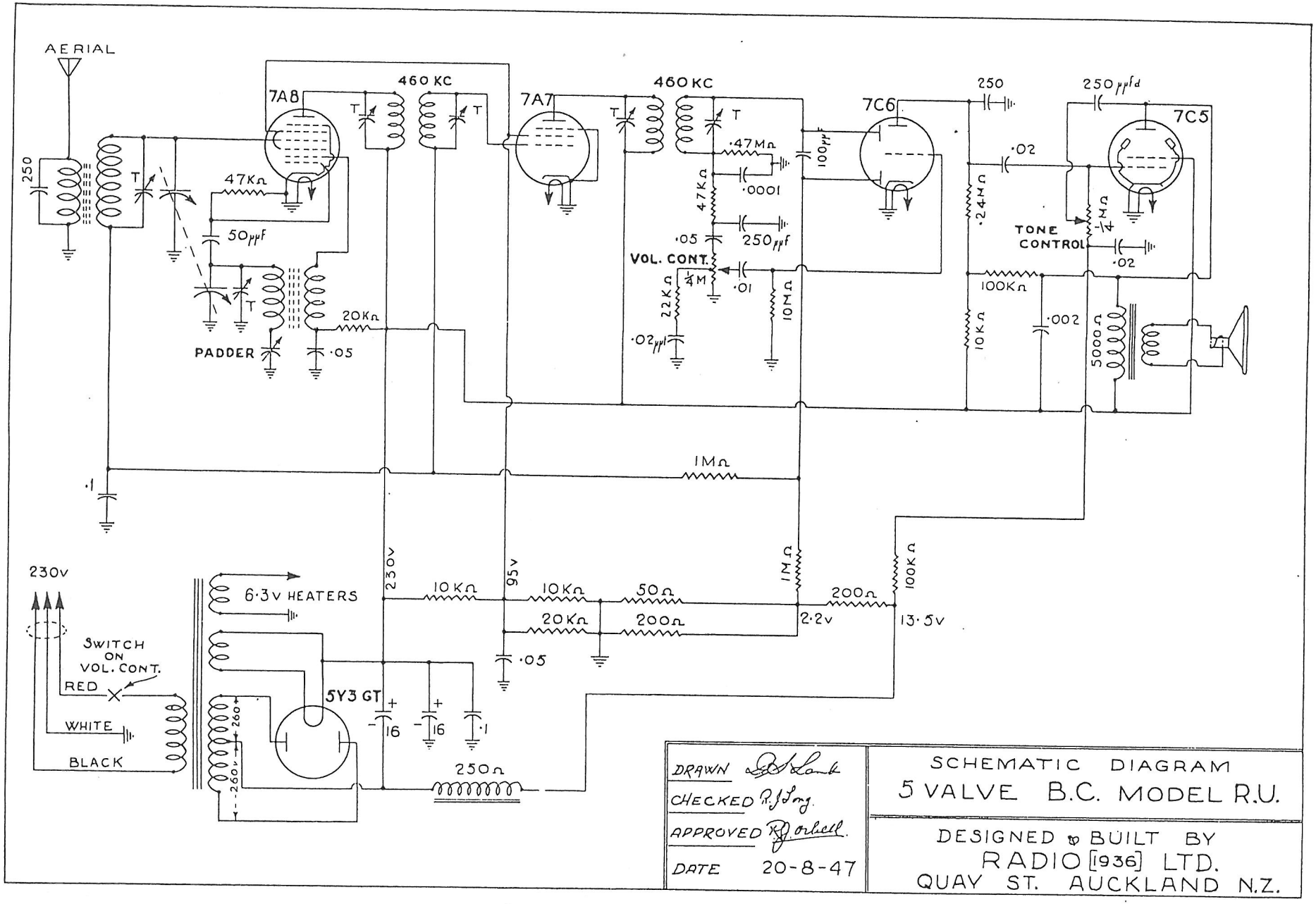
AERIAL
250
7A8
460 KC
T
47KΩ
50μμf
PADDER
20KΩ
·05
·1
7A7
460 KC
·47MΩ
·0001
47KΩ
·05
250μμf
VOL. CONT.
¼M
·01
22KΩ
10MΩ
·02μμf
100μμf
7C6
250
·02
·24MΩ
10KΩ
100KΩ
·002
250μμfd
7C5
TONE CONTROL
¼MΩ
·02
5000Ω
1MΩ
230v
6·3v HEATERS
SWITCH ON VOL. CONT.
RED
WHITE
BLACK
260v
5Y3 GT
16
16
·1
250Ω
230v
10KΩ
95v
10KΩ
50Ω
20KΩ
200Ω
·05
1MΩ
2·2v
200Ω
100KΩ
13·5v
DRAWN
CHECKED
APPROVED
DATE 20-8-47
SCHEMATIC DIAGRAM
5 VALVE B.C. MODEL R.U.
DESIGNED & BUILT BY
RADIO [1936] LTD.
QUAY ST. AUCKLAND N.Z.