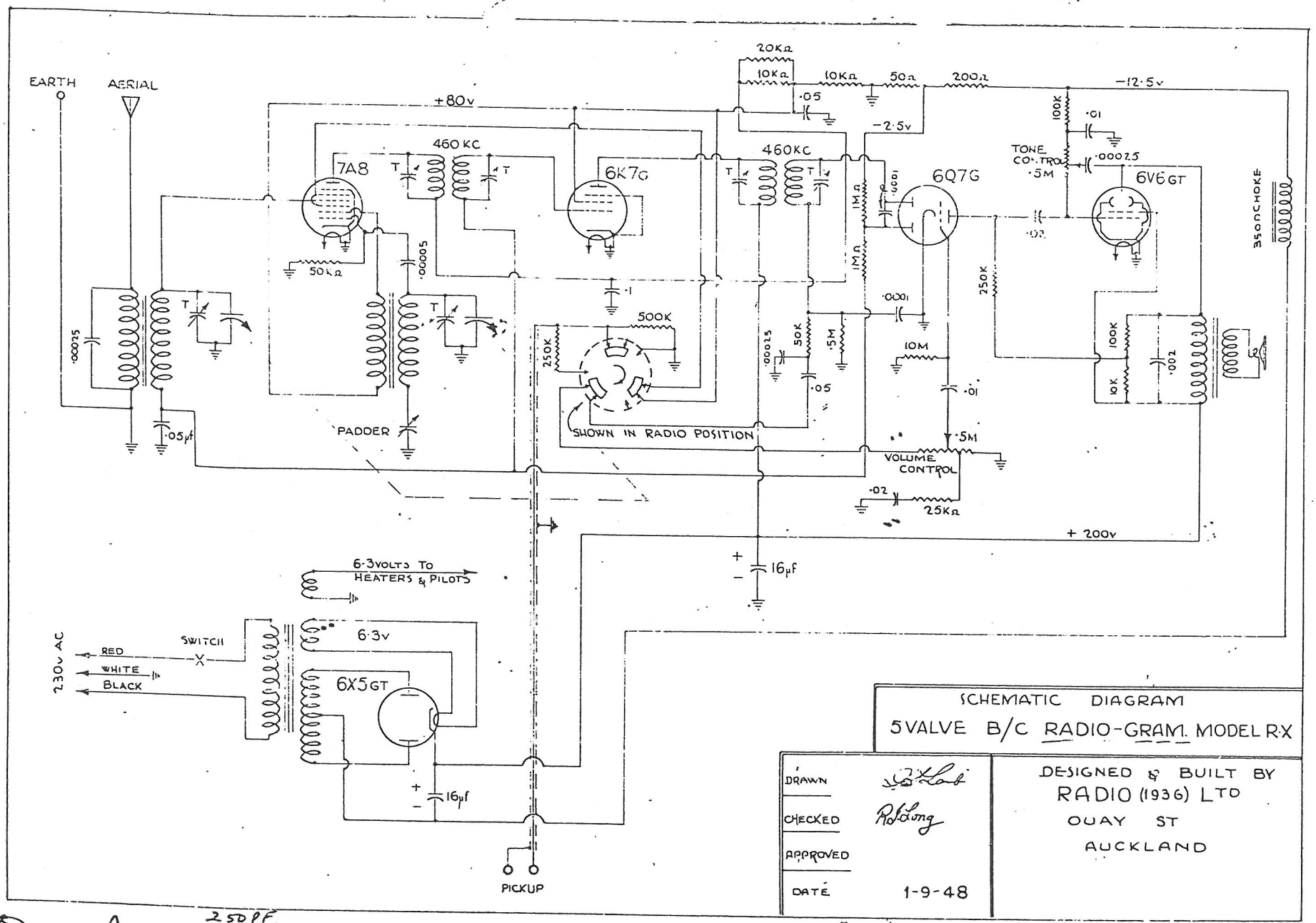

RX

Remove ~~[illegible]~~ 250 PF across aerial coil pri
& nearby winding, gain when not using outside aerial

RB. simi

RX