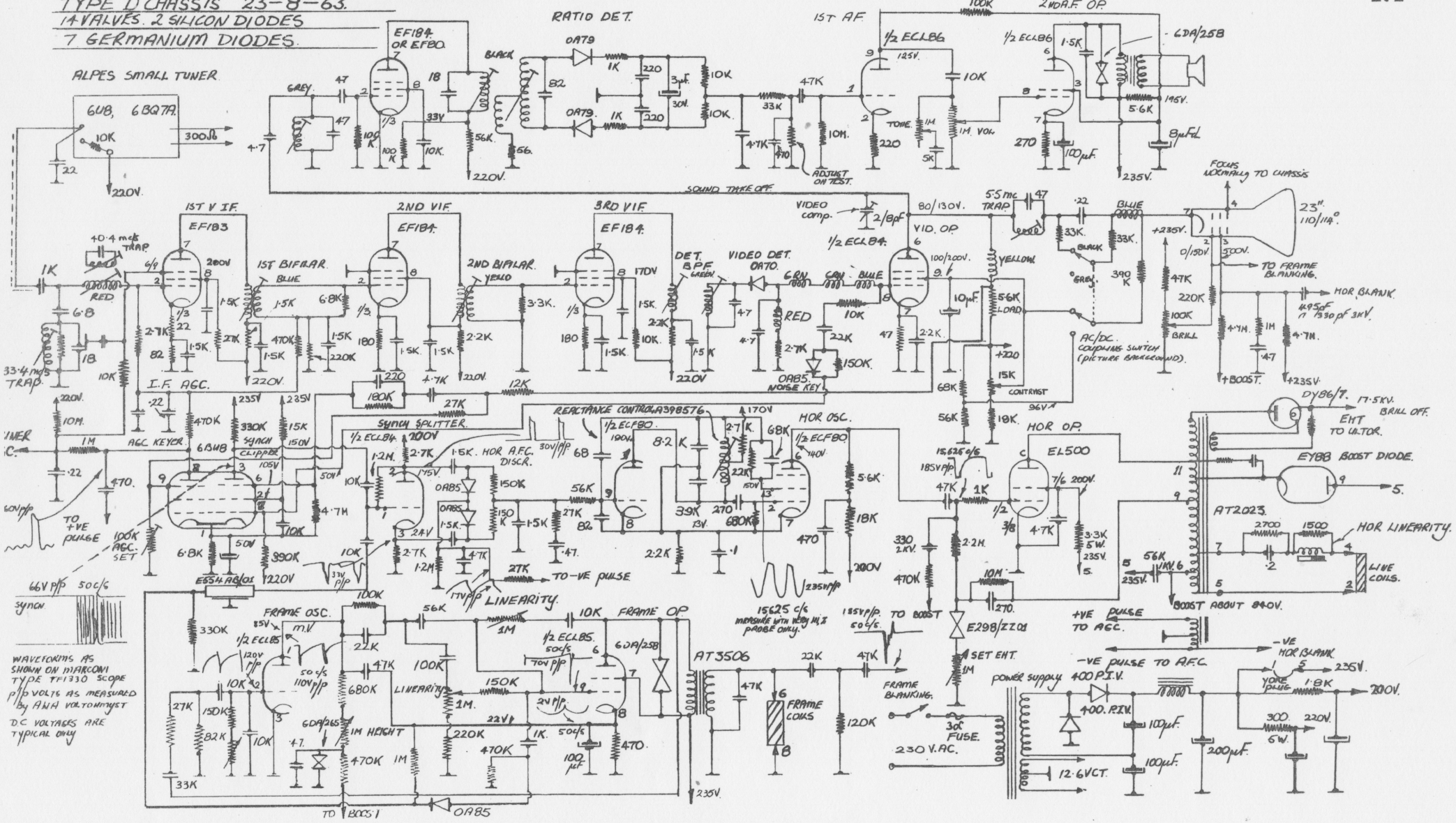REDFERN RADIO. GLEN EDEN. AUCK T.V. RECEIVER
TYPE D CHASSIS 23-8-63.
14 VALVES. 2 SILICON DIODES
7 GERMANIUM DIODES.