LIST OF PARTS REQUIRED FOR TUNER

1 X Chassis (punched)
1 Dial assembly Q type D5/SC11.
1 Polar 1042 Gang.
2 Q type 262 I.F. Transformers.
1 Aerial coil type 190A.
1 Osc. coil type 111AX.
3 Noval valve sockets.
4 tie lugs 2 way.
1 " " " " 8 " ".
1 2 pole 2 pos. switch.
2 6.3v. m.e.s. lamps.
10 earth lugs.
1 Doz. nuts & bolts $\frac{1}{8}$ X $\frac{3}{8}$.
4 1" X $\frac{1}{8}$. nuts & bolts.
4 $\frac{1}{4}$ Grommetts.
2 $\frac{3}{8}$ """""""""".
2 3-50 pf. trimmers.
1 X ECH81 1 x EBF80. 1 X ECC82.
3 yds. each of 4 colours wire.
1 yd. t.c. wire.
1 yd. shielded wire.
1 octal plug & cover
4 gang mounting grommets.
4 $\frac{1}{4}$" P.K. screws.

.....RESISTORS.....

1 x 3K. 10 watt
1 x 1.5K 1 Watt.
5 x 47K. """""".
4 x 1 meg. """""".
1 x 100K. """""".
1 x 150K. """".
1 x 150 ohm.
1 x 2.2K
1 x 330 ohm.

.....CAPACTORS.....

1 8mfd. 450 v.d.c.w.
2 x .05mfd.
5 x .1mfd.
1 x 495 pf.
2 x 50 pf.
1 x 100x100 pf.
1 x 500 pf.
1 x .01 mfd.

PARTS REQUIRED TO FIT MAGIC EYE

1 EM80 Valve 1 socket for same
1 .1 mfd. Cond. 2 1meg. resistor

.....
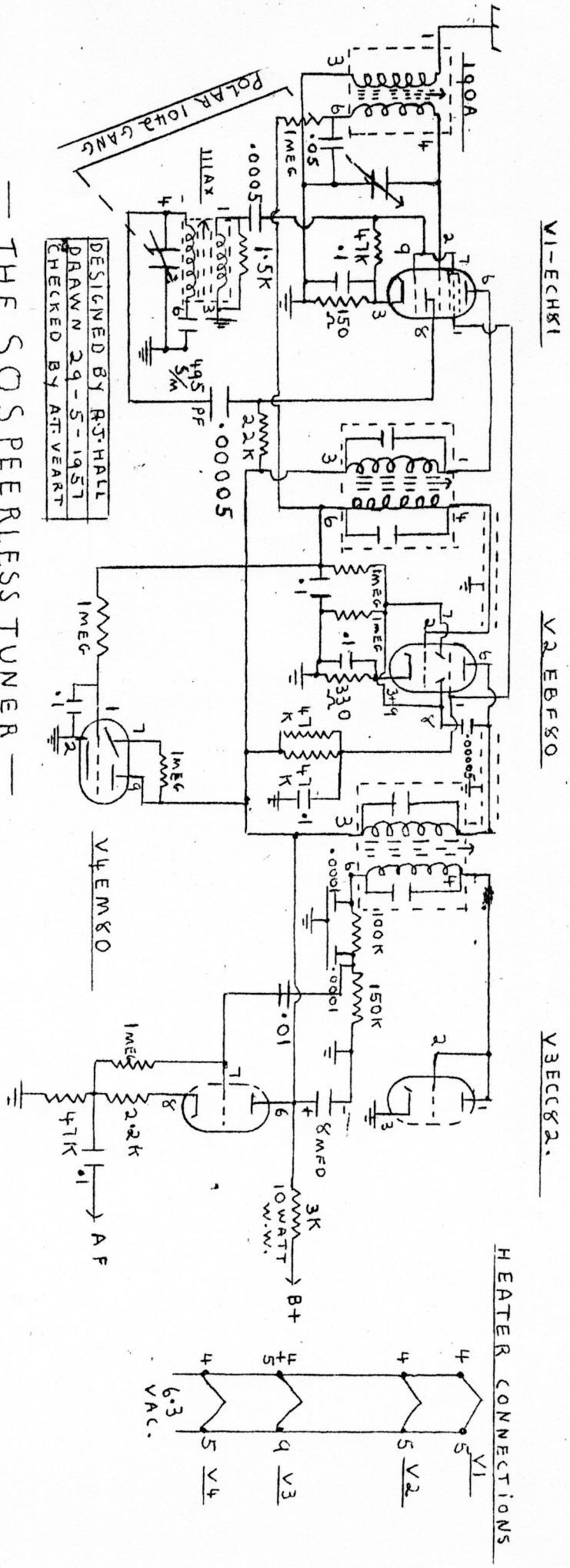
The high tension required is approx. 400V. at 15 MA.
The heater current is approx. 1.2 amps.