NOTE:- ONE CHANNEL ONLY *MATCHED
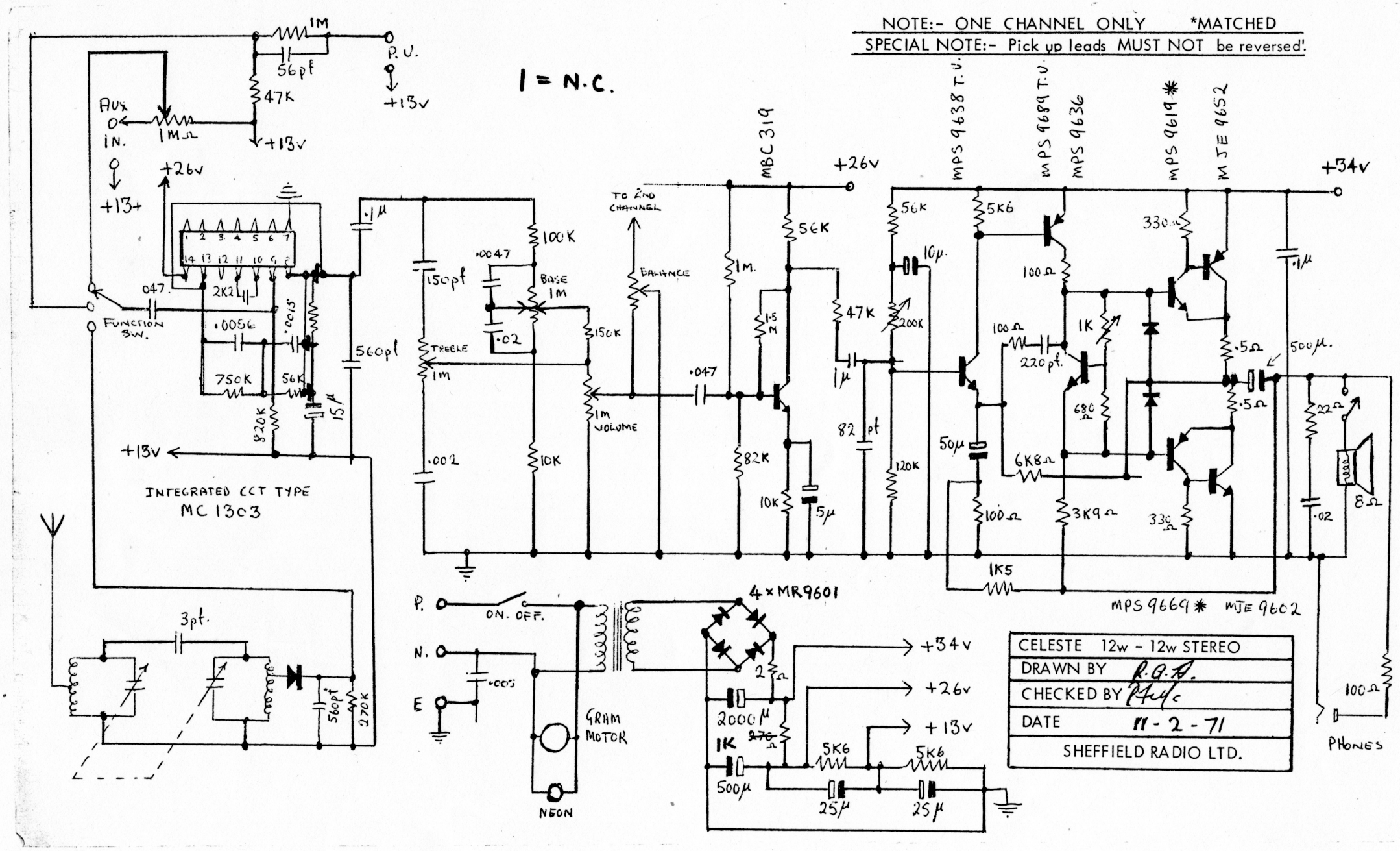
SPECIAL NOTE:- Pick up leads MUST NOT be reversed!