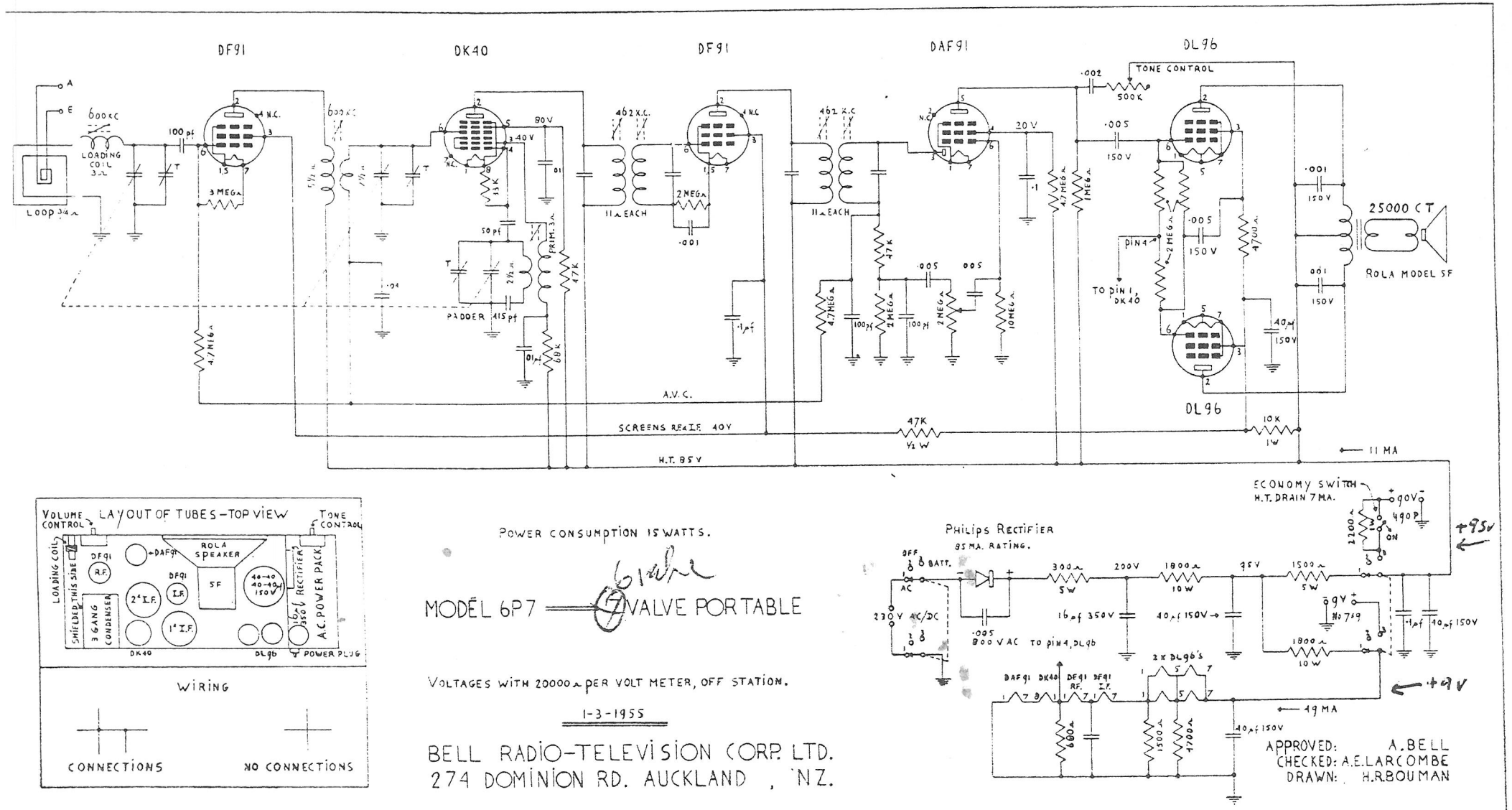

Maitland Radio Co. Ltd.
1 VIVIAN STREET - PHONE 51-848

Replace any 100V Dixon condenser