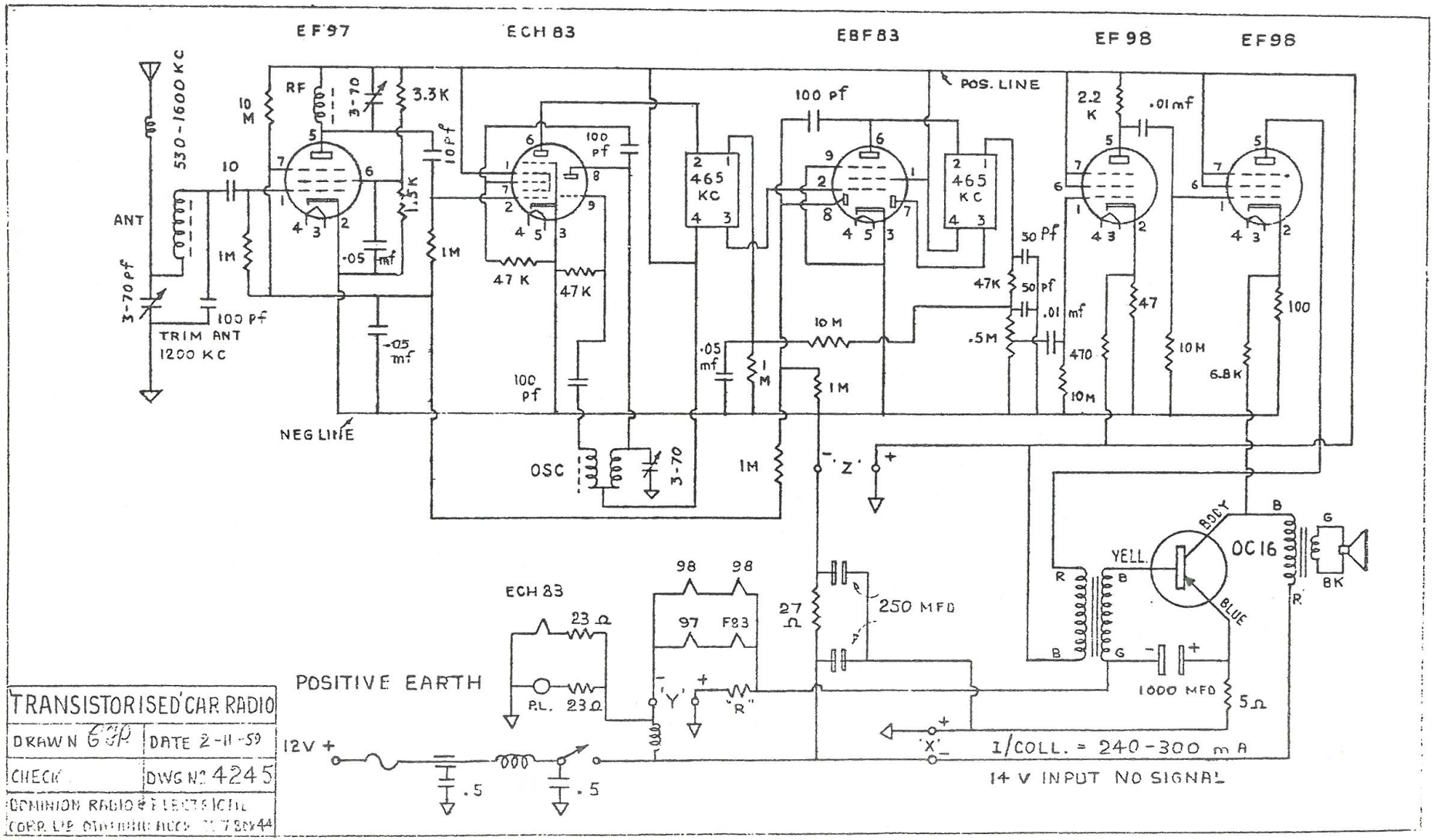
EF97
ECH83
EBF83
EF98
EF98
530-1600 KC
ANT
3-70 pf
TRIM ANT
1200 KC
100 pf
10 M
RF
3-70
3.3K
10
1M
.05 mf
1.5K
10 pf
100 pf
47 K
47K
.05 mf
NEG LINE
OSC
3-70
465 KC
465 KC
100 pf
POS. LINE
10 M
.05 mf
1 M
1M
1M
'Z'
50 pf
47K
50 pf
.01 mf
.5M
2.2 K
.01 mf
470
10M
47
10 M
6.8K
100
ECH83
23 Ω
P.L. 23 Ω
98
98
97
F83
'Y'
'R'
27 Ω
250 MFD
POSITIVE EARTH
12V +
.5
.5
'X'
I/COLL. = 240-300 m A
14 V INPUT NO SIGNAL
BODY
YELL.
OC16
BLUE
B
G
BK
R
1000 MFD
5 Ω
TRANSISTORISED CAR RADIO
DRAWN
DATE 2-11-59
CHECK
DWG No 4245
DOMINION RADIO & ELECTRICAL CORP. LTD