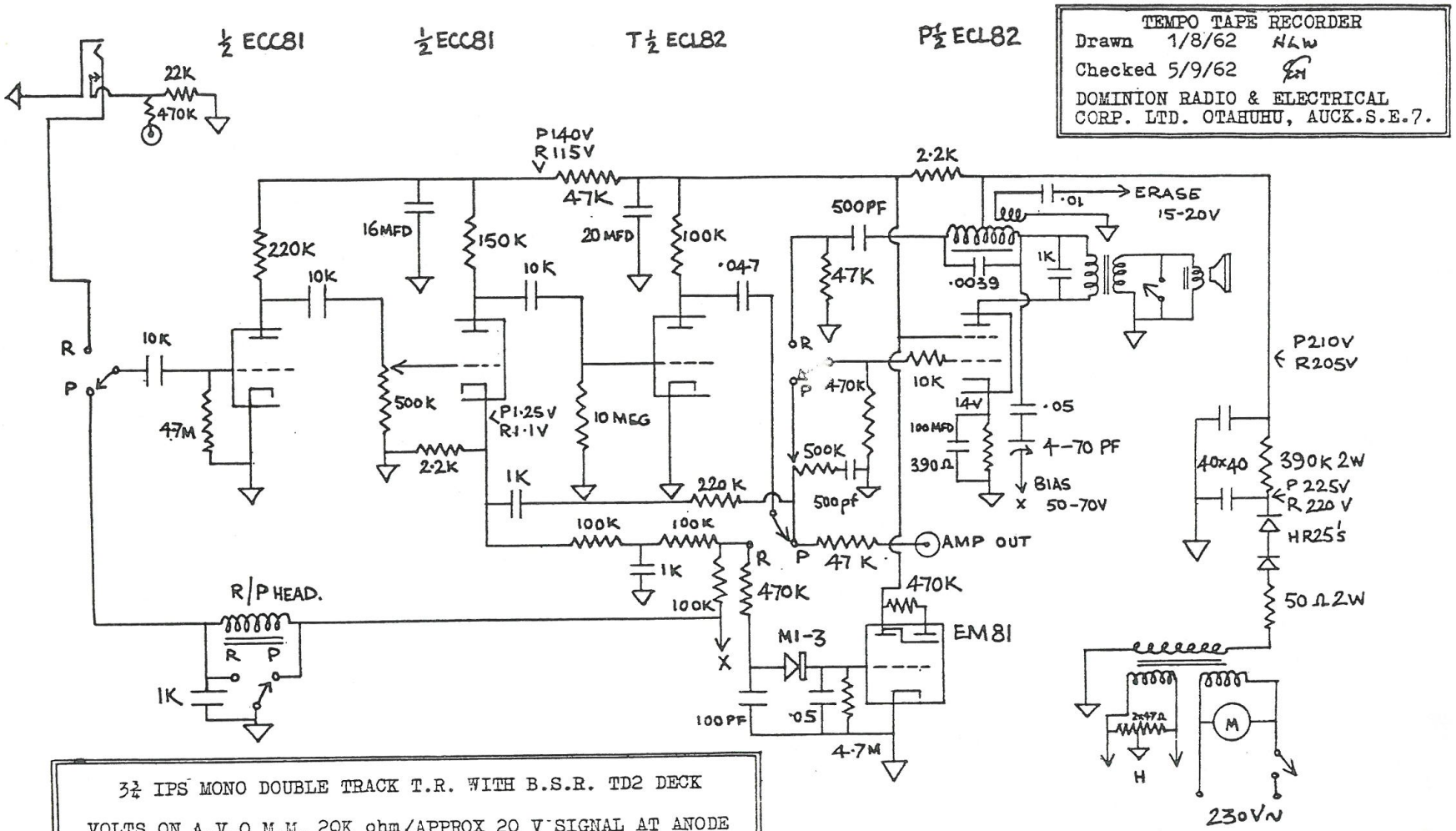

TEMPO TAPE RECORDER
Drawn 1/8/62 NLW
Checked 5/9/62
DOMINION RADIO & ELECTRICAL CORP. LTD. OTAHUHU, AUCK.S.E.7.

3¾ IPS MONO DOUBLE TRACK T.R. WITH B.S.R. TD2 DECK

VOLTS ON A.V.O M.M. 20K ohm/APPROX 20 V SIGNAL AT ANODE OF H.F. OSC VOLTS VTVM. Per Volt ECL82 TRIODE TO CLOSE INDICATOR AT 45 KC/S. AT OVERLOAD POINT