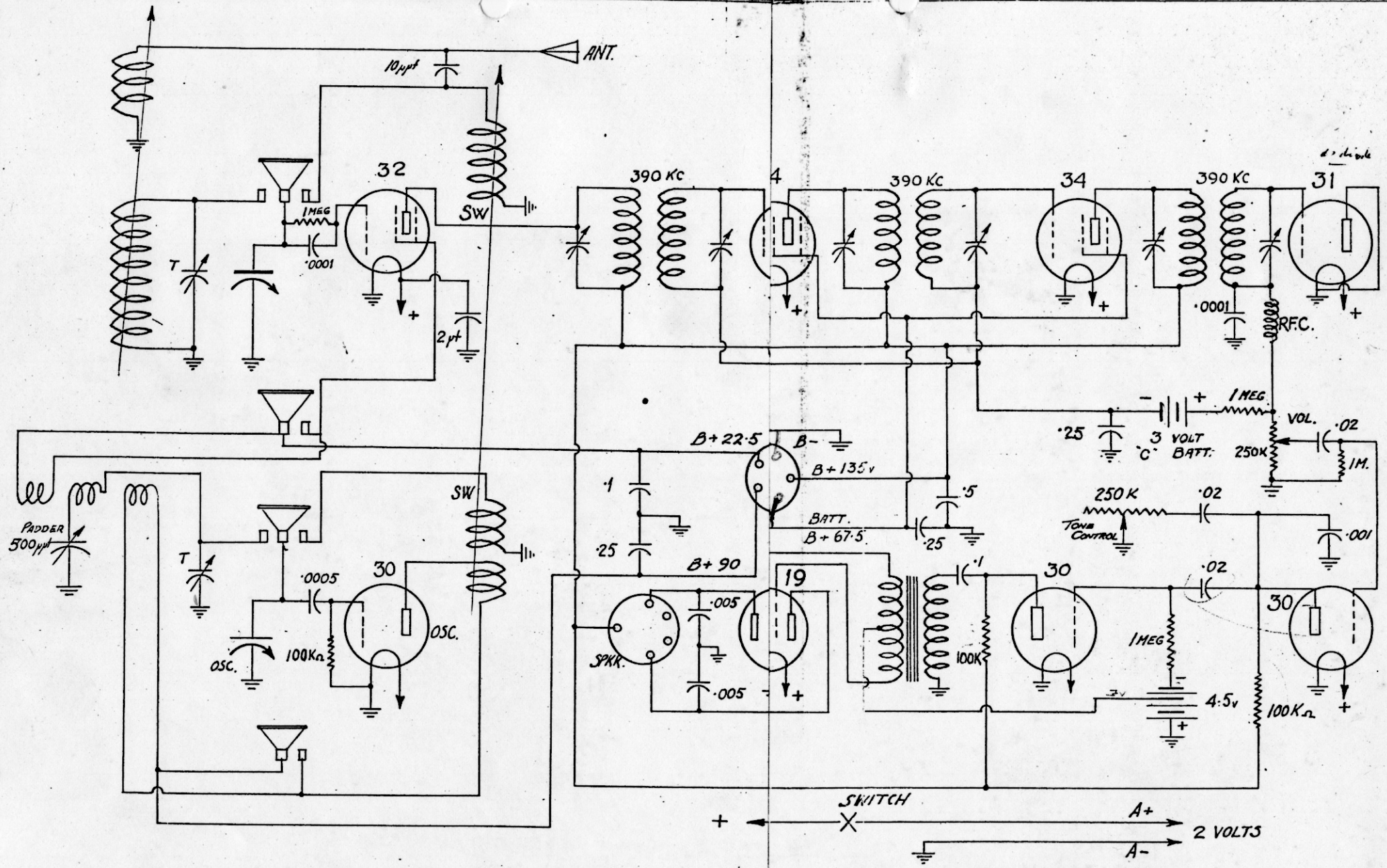

NB SWITCH CLOSES TO RIGHT FOR SHORT WAVES.
TO LEFT FOR ~~LONG~~ MEDIUM WAVES.

BATT. CONNECTIONS SHOWN LOOKING AT TOP OF SOCKET.

8 VALVE D.W. BATTERY - 1934

REDRAWN D.S. Lamb 10-4-46 Redrawn