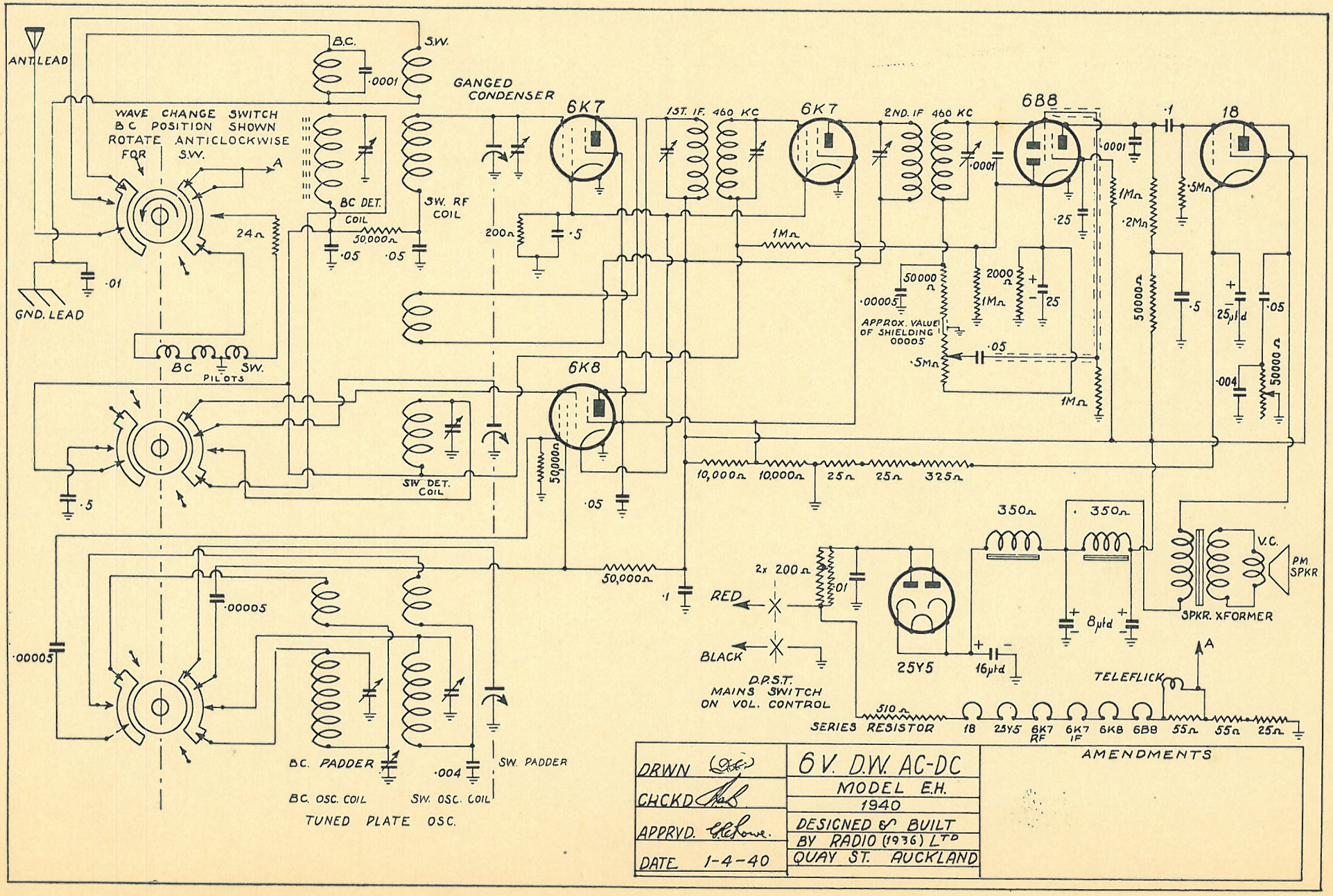

DRWN	6 V. D.W. AC-DC	AMENDMENTS
CHCKD	MODEL E.H.	
	1940	
APPRVD.	DESIGNED & BUILT	
	BY RADIO (1936) LTD	
DATE 1-4-40	QUAY ST. AUCKLAND	

EH