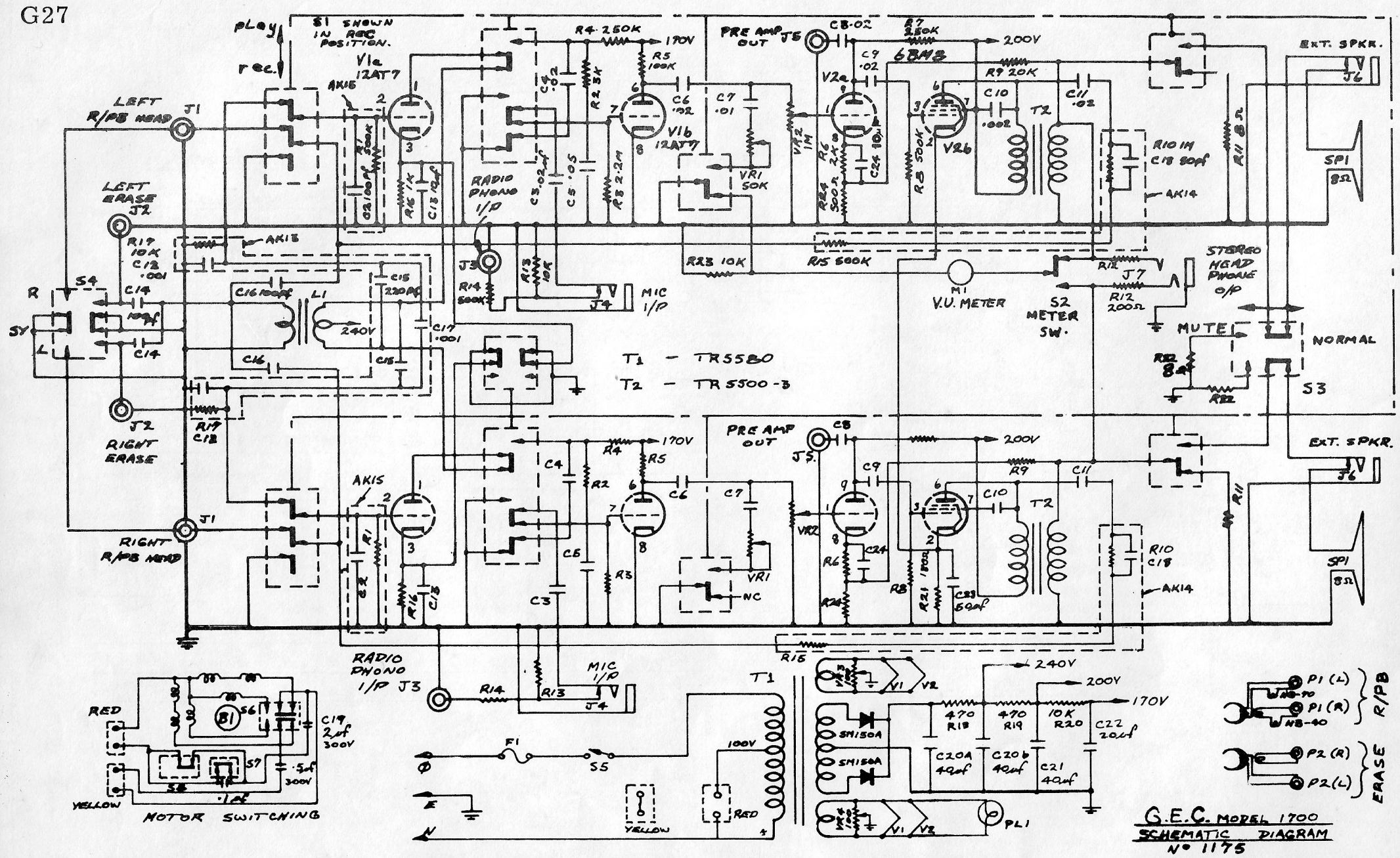
play
rec.
S1 SHOWN IN REC POSITION.
V1a 12AT7
AK15
LEFT R/PB HEAD
J1
LEFT ERASE J2
R17 10K
C12 .001
AK13
R
S4
SY
L
C14
C16 100pf
L1
240V
C15 220pf
C17 .001
C16
J2 RIGHT ERASE
R17 C12
RIGHT R/PB HEAD
J1
AK15
R1
C2
R16
C13
RADIO PHONO I/P
C3 .02
C5 .05
R3 2.2M
R2 3K
C4 .02
R4 250K
170V
R5 100K
V1b 12AT7
C6 .02
C7 .01
VR1 50K
VR2 1M
PRE AMP OUT J5
C8 .02
C9 .02
V2a
R6 2.2K
C24 10µ
R24 500Ω
R7 250K
200V
6BM8
R9 20K
C10 .002
T2
V2b
R8 500K
C11 .02
R10 1M
C18 50pf
AK14
R11 8Ω
EXT. SPKR.
J6
SP1 8Ω
R23 10K
R15 500K
M1 V.U. METER
S2 METER SW.
R12
J7
R12 200Ω
STEREO HEAD PHONE O/P
MUTE
NORMAL
R22 8Ω
R22
S3
T1 - TR5580
T2 - TR5500-3
J3
R14 500K
R13 10K
J4
MIC I/P
AK15
C1
R1
C2
R16
C13
RADIO PHONO I/P J3
R14
R13
MIC I/P
J4
C4
R2
R4
170V
R5
C6
C7
C5
R3
C3
VR1
NC
PRE AMP OUT
J5
C8
C9
VR2
R6
C24
R24
200V
R9
C11
C10
T2
R8
R21 1MΩ
C23 50pf
R10 C18
AK14
R11
EXT. SPKR.
J6
SP1 8Ω
R15
T1
V1
V2
240V
200V
170V
470 R18
470 R19
10K R20
C22 20µf
SM150A
SM150A
C20A 40µf
C20b 40µf
C21 40µf
PL1
RED
B1
S6
C19 2µf 300V
S7
.5µf 300V
S8
.1µf
YELLOW
MOTOR SWITCHING
F1
S5
100V
YELLOW
RED
P1 (L)
P1 (R)
WB-70
WB-40
R/PB
P2 (R)
P2 (L)
ERASE
G.E.C. MODEL 1700
SCHEMATIC DIAGRAM
No 1175