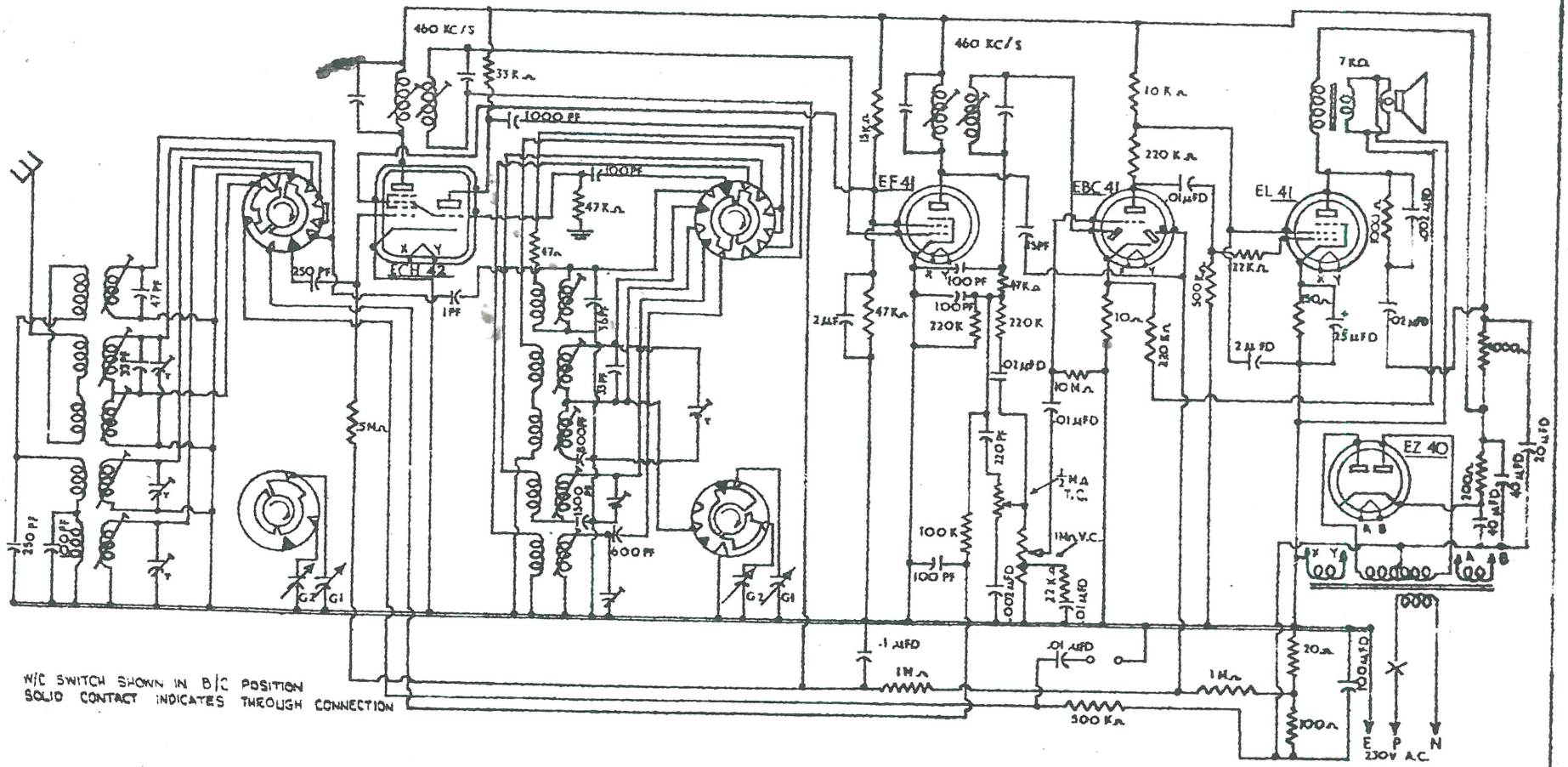

DRAWN	R.J. Long	5 V BANDSPREAD A.C.
TRACED	R.J.	MODEL EKCO-A242
CHECKED	W. Hallowell	AIRLIE
APPROVED	R.J. Long	
DATE	29-11-56	