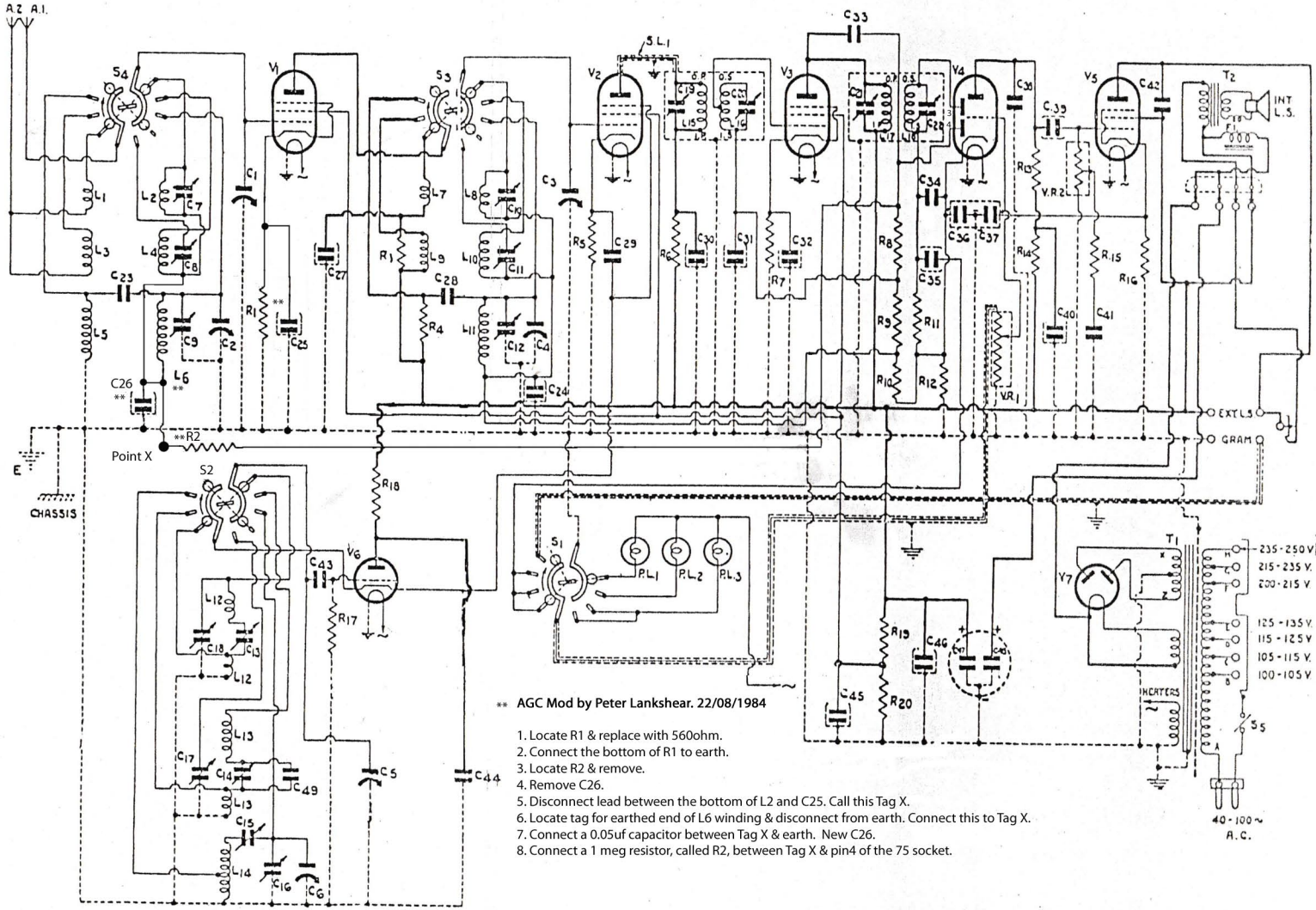


** AGC Mod by Peter Lankshear. 22/08/1984

1. Locate R1 & replace with 560ohm.
2. Connect the bottom of R1 to earth.
3. Locate R2 & remove.
4. Remove C26.
5. Disconnect lead between the bottom of L2 and C25. Call this Tag X.
6. Locate tag for earthed end of L6 winding & disconnect from earth. Connect this to Tag X.
7. Connect a 0.05uf capacitor between Tag X & earth. New C26.
8. Connect a 1 meg resistor, called R2, between Tag X & pin4 of the 75 socket.