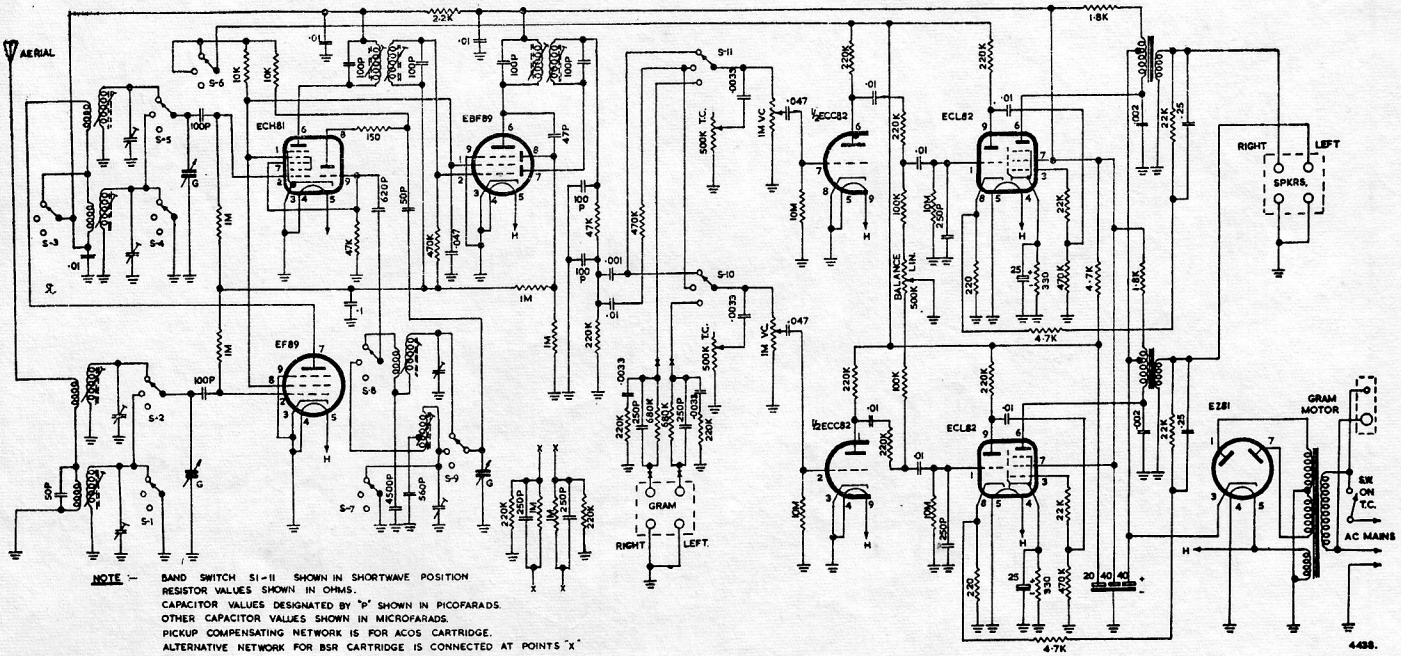

NOTE :- BAND SWITCH S1-11 SHOWN IN SHORTWAVE POSITION
RESISTOR VALUES SHOWN IN OHMS.
CAPACITOR VALUES DESIGNATED BY "P" SHOWN IN PICOFARADS.
OTHER CAPACITOR VALUES SHOWN IN MICROFARADS.
PICKUP COMPENSATING NETWORK IS FOR ACOS CARTRIDGE.
ALTERNATIVE NETWORK FOR BSR CARTRIDGE IS CONNECTED AT POINTS "X"

PYE 7 Valve D/W. STEREOGRAM 5 Shaft (Between Serial Nos. 145000 and 148600)

AP5-A.

D LTD.
ALL APPL. DEPT. 94
ND RD.